FASTCAM SA-X2
FASTCAM SA-X2 RV

Hardware Manual

Revision 1.00 ASIA

Photron

- The copyright of this manual is held by PHOTRON LIMITED.
- Product specifications and manual contents can change without advanced notification.
- This manual was created taking every possible measure to ensure the accuracy of its contents. However, if you find a section which is unclear, a mistake, or an omission, please contact PHOTRON LIMITED using the contact information provided at the end of the manual.
- PHOTRON LIMITED bears no responsibility for the results of using the product or from following the instructions in this manual.

Introduction

Thank you for your purchase of Photron's high-speed camera system, the "FASTCAM SA-X2 / SA-X2 RV" (referred to below as the system).
This manual contains the operating instructions and warnings necessary for using the system.
Before using the system, please read the entire manual.
If any part of this manual is unclear, contact Photron using the contact information printed at the back of the manual.
After you finish reading the manual, store it in a safe place along with the warranty card and refer back to it when necessary.

Manual Notation

The following icons and symbols are used in the explanations in this manual.

Icon/Symbol	Description
Important	This symbol indicates content that should always be read.
Caution	This symbol indicates instructions that should always be followed when using the software, or things to be careful of when using the software.
Supplement	This symbol indicates supplementary items to be aware of when using the system.
Reference	This symbol indicates the location of a reference.
MEMO	This symbol indicates a space for you to make notes.
" "	This symbol is used to indicate the names of items on a screen, references, dialog names, and connectors.
[ ]	This symbol is used to indicate menu names, and sub-menu names.

Using the Manual

This section explains the layout of the manual.

- Introduction
  The introduction explains the manual and safety precautions.

- Chapter. 1 Overview
  This chapter gives an overview of the system and an explanation of its features.

- Chapter. 2 Setup
  This chapter gives an overview of the components that make up the system. It also explains basic keypad operation and a list of items that should be checked before using the system.

- Chapter. 3 Recording
  This chapter explains operations related to recording.

- Chapter. 4 Connecting a PC
  This chapter explains the procedure for connecting the system to a PC. Refer to the “Photron FASTCAM Viewer User’s Manual” for additional details on using a PC to control the system.

- Chapter. 5 Product Specifications
  This chapter explains the system’s specifications.

- Chapter. 6 Warranty
  This chapter explains about the warranty.

- Chapter. 7 Contacting Photron
  This chapter lists the contact information to use when contacting Photron if the system malfunctions or if a portion of the manual is unclear.

Using the System Safely and Correctly

In order to prevent injury to yourself and others, and to prevent damage to property, carefully observe the following safety precautions.

Photron has given its full attention to the safety of this system. However, the extent of damage and injury potentially caused by ignoring the content of the safety precautions and using the system incorrectly is explained next. Please pay careful attention to the content of the safety precautions when using the system.

Warning	This symbol indicates actions that carry the risk that a person could receive a serious injury.

Caution	This symbol indicates actions that carry the risk that a person could receive a moderate injury, or that damage to physical property might occur.

- The safety precautions to be observed are explained with the following symbols.

	This symbol indicates actions that require caution.

	This symbol indicates actions that are prohibited and must be avoided.

	This symbol indicates actions that must always be performed.

Warning

■ Do not perform actions that will damage the AC cable or plug.
(Do not damage the cable, modify it, use it near a heater, excessively bend, twist or pull on it, place heavy objects on it, or bundle it.)
Using the cable when damaged can cause fire, electric shock, or a short circuit.

■ Do not use the system in a manner which will exceed the rating of the power outlet or wiring equipment used.
Exceeding the power rating might cause a fire from excessive heat.

■ Do not insert metallic objects inside, or pour liquids such as water on, the system.
Doing so can cause fire, electric shock, or malfunction from short circuit or heat.

■ Do not disassemble or modify the system.
There are high voltages inside the system that can cause electric shock.

■ Do not plug in or unplug the power cord with wet hands.
Doing so can cause electric shock.

■ This chapter lists the contact information to use when contacting Photron if the system malfunctions or if a portion of the manual is unclear.
Not fully plugging in the power cable can cause fire from electric shock or heat.

■ When something is wrong with the system, unplug the power cable immediately.
- When a foreign substance or liquid, such as metal or water, gets inside.
- When the outer case is broken or damaged, such as from a fall.
- When the system produces smoke, a strange smell, or strange sound.

Using the system in these conditions might cause a fire or electric shock.

Caution

■ Always unplug the system when cleaning it or when it is unused for a long period of time. Leaving or storing the system connected to the power source might cause fire from insulation deterioration or electrical discharge.

■Please consult us in advance when you perform an event by which laser light or direct rays fall on the image sensor surface.

■ Do not set the system in a location where the temperature gets unusually hot.
The trunk and inside of a car can get especially hot in summer.
Doing so can cause the outer case and internal components to deteriorate or cause a fire.

■ Do not place the system in a location prone to oily smoke or steam, or in a location with a lot of humidity or dust.
Oil, moisture, and dust conduct electricity, which can cause a fire or electric shock.

■ Ambient temperature 0-40° C, humidity 85% RH or lower, maximum altitude 2,000m or lower.
In addition, if exceeding these limits, use in a condensation-free environment.
Doing so can cause malfunction.

■ Do not store the equipment in a location where the temperature goes below -20°C or higher than 60°C. Also, prevent condensation from forming during shipment

■ This device is for indoor use, do not use it outdoors.
Do not use in a location that has dust.
Doing so can cause malfunction. *Without SA-X RV

■ When shipping, remove the connecting cable and use the original packaging or a dedicated carrying case.
Do not ship the equipment in an environment where the temperature goes below -20°C or higher than 60°C. Also, prevent condensation from forming during shipment

Cleaning of the Image Sensor Surface

Electrostatic Discharge (ESD) events may cause immediate and unrecoverable damage to the image sensor. Please read the following instructions and take EXTREME CARE when cleaning the image sensor surface.

- ALWAYS take appropriate anti-static precautions when cleaning or working near the Image sensor.
- DO NOT use any form of cleaning equipment using electrostatic or ‘charged fiber’ technology.

- Please discharge any electrostatic build up in your body by touching a grounded metallic Surface before working near the camera sensor.
- Very gently, use only clean and dry air to remove dust from surface of the image sensor.
- To remove stubborn contamination use the highest grade (e.g. VLSI grade) pure Isopropyl alcohol (IPA) with optical wipes of ‘clean room’ grade.
- Extreme care must be taken! Gently wipe across the sensor in a single action. (DO NOT rub to avoid abrasive damage to delicate optical coatings on the glass surface.)

Put the ferrite core to the AC adapter

To assist in preventing data lost by a system shutdown induced from a lightning surge and the like, please add the supplied ferrite core to the power cable approximately 200 mm (approximately 8 inches) from the system connector. The power cable should pass through the core three times. Please see illustrations below.

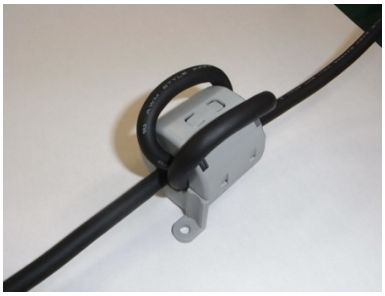

MEMO

Table of Contents

Chapter. 1 Overview 1

1.1. Product Overview and Features 2

Chapter. 2 Setup 3

2.1. About the System's Components and Accessories 4
2.1.1. Components 4
2.1.2. Accessories/Options 4
2.1.3. Type 5
2.2. Part Names 6
2.2.1. Camera Body 6
2.2.2. Camera Body Part Names 8
2.2.3. Status Display LEDs on the Rear of the Camera Body 10
2.2.4. Interchangeable Lens Mounts 12
2.2.5. Remote Keypad (Optional) 13
2.2.6. RS-422 Serial Control 14
2.2.7. I/O Port Connector 15
2.2.8. Power Supply Connector 17
2.2.9. SD Memory Card Slots 18
2.3. Device Connections 19
2.3.1. Connecting a Video Monitor 19
2.3.2. Connecting the AC Power Supply 20
2.3.3. Connecting the Keypad (Optional) 21
2.3.4. Connecting a PC 22

Chapter. 3 Recording 23

3.1. Image Initialization (Calibration) 24
3.1.1. Executing Calibration 24
3.1.2. Saving Calibration Settings 24
3.1.3. Loading Calibration Settings 24
3.1.4. The operation of the Mechanical shutter 25
3.2. Selecting the Frame Rate 26
3.2.1. Switching Frame Rate (13.5K mode Function) 26
3.3. Selecting the Resolution 27
3.4. Selecting the Shutter Speed 27
3.5. Dual Slope Shutter 29
3.6. AUTO EXPOSURE Operation 30
3.7. Image Trigger 32
3.8. Selecting the Trigger Mode 34
3.8.1. START Mode 34
3.8.2. CENTER Mode 34
3.8.3. END Mode 35
3.8.4. MANUAL Mode 35
3.8.5. RANDOM Mode 35
3.8.6. RANDOM RESET Mode 36

3.8.7. RANDOM CENTER Mode 37
3.8.8. RANDOM MANUAL Mode 38
3.9. LOW LIGHT Mode 39
3.10. VARIABLE Setting 39
3.11. White Balance Adjustment (Color Models Only) 40
3.11.1. Using Preset White Balance (Color Models Only) 40
3.11.2. Using User White Balance (Color Models Only) 40
3.12. Color Enhancement Function (Color Models Only) 41
3.13. Look-Up Table (LUT) Operations 41
3.13.1. Using a Custom LUT 44
3.14. Edge Enhancement Function 44
3.15. Partition Memory & Record 44
3.16. Simultaneous Replay/Record Function 45
3.17. Input / Output Signal Types 46
3.17.1. TRIG TTL IN Connector 46
3.17.2. TRIG TTL OUT Connector 46
3.17.3. TRIG SW IN Connector 46
3.17.4. SYNC IN Connector 46
3.17.5. GENERAL IN Connector 47
3.17.6. GENERAL OUT (1, 2, 3) Connector 47
3.18. Using External Triggers 48
3.18.1. Inputting an External Trigger Signal 48
3.18.2. Outputting External Trigger Signals 50
3.19. Using External Synchronization Signals 51
3.19.1. Inputting an External Synchronization Signal 51
3.19.2. Outputting an External Synchronization Signal 51
3.19.3. Synchronization with a variable frequency 52
3.19.4. Synchronizing Multiple FASTCAM SA-X Systems 53
(Multiple Unit Synchronized Recording) 53
3.19.5. Synchronizing the System with Other External Devices 55
(Frame Rate Synchronized Recording) 55
3.19.6. Synchronizing the System with Other Cameras 58
(Mixed Device Synchronized Recording) 58
3.20. GENERAL Signal Settings 59
3.20.1. GENERAL IN Signal Settings 59
3.20.2. GENERAL OUT Signal Settings 60
3.21. Signal Delay 61
3.22. Event Marker Function 62
3.23. Using Programmable Switch (USER SW) 63
3.24. IRIG Time Code (External Time Synchronization) 64
3.25. IRIG-sync Operation 65
3.26. 8bit Recording Mode 66
3.27. Direct Trigger / Direct Start Mode 67

Chapter. 4 Connecting a PC 69

4.1. Connecting the Gigabit Ethernet Interface to a PC 70

4.1.1. Connecting the System and a PC 71
4.1.2. Setting the IP Address 71
4.1.3. Using DHCP (Dynamic Host Configuration Protocol) 72
4.1.4. Connecting Multiple Systems and a PC 72
4.1.5. High-speed Download Feature 72
4.1.6. Simultaneous Replay/Record Function 73
4.1.7. Gigabit Ethernet Interface Initialization 73
4.1.8. Camera IP Address Initialization 73

Chapter. 5 Product Specifications 75

5.1. Specifications 76
5.1.1. Product Specifications 76
5.1.2. General Specifications 77
5.1.3. Options 78
5.1.4. Frame Rate and Resolution 80
5.1.5. Shutter Speed List (uncertain interval extension: Disable) 84
5.1.6. Shutter Speed List (720,000fps or lower / uncertain interval extension: Enable) 85
5.1.7. Shutter Speed List (720,001fps or upper / uncertain interval extension: Enable) 86
5.1.8. Shutter Speed List (13.5K mode OFF / uncertain interval extension: Enable) 87
5.1.9. Recordable Image Count/Resolution (12bit) 88
5.1.10. Recordable Image Count/Resolution (8bit) 88
5.1.11. Recordable Times/Resolution (12bit) 89
5.1.12. Recordable Times/Resolution (8bit) 89
5.2. Dimensions 90
5.2.1. Camera Body 90
5.2.2. Remote Keypad (Optional) 92
5.2.3. LCD Remote Keypad (Optional) 93
5.2.4. AC Power Supply Unit 94

Chapter. 6 Warranty 95

6.1. About the Warranty 96

Chapter. 7 Contacting Photron 97

7.1. Contact Information 98

MEMO

Chapter. 1 **Overview**

1.1. Product Overview and Features

1.1. Product Overview and Features

The FASTCAM SA-X2 is a powerful engineering tool for use in research and development, design, production, and quality control, and in numerous fields such as science, medicine, biology, aviation and space. The system features superior basic performance with mega pixel resolution, an ultra-sensitive image sensor capable of clear recording in low-light, and an ultra-high speed frame, rate of a maximum of 900,000 fps (frame per second). It also employs a hybrid design to allow operation via a monitor keypad and operation from the PC software via a gigabit Ethernet connection to more easily implement analysis of dynamic bodies that had been difficult to analyze until now.

Use the state-of-the-art technology in the FASTCAM SA-X2 to slow down and observe high-speed dynamic bodies or events, and also as an input component for a dynamic image measurement system.

FASTCAM SA-X2

Chapter. 2 **Setup**

2.1. About the System's Components and Accessories

2.2. Part Names

2.3. Device Connections

2.1. About the System's Components and Accessories

2.1.1. Components

The system's standard components are listed below. Remove the components from the packaging and check them.

1.	Camera Body (with G type F mount)	One
2.	AC Power Supply Unit/AC Cable	One
3.	C-mount	One
4.	Hexagonal Wrench for Changing Lens Mounts (1.5 mm, 2 mm, 4 mm, 5 mm)	One each
5.	Lens Mount Cap (built into the camera body)	One
6.	I/O (Input and Output) Cable	One
7.	FASTCAM Series Setup Disk (Driver/Application DVD)	One
8.	FASTCAM SA-X2 Hardware Manual (this manual)	One
9.	Photron FASTCAM Viewer (PFV) User's Manual	One
10.	How to Make a Gigabit Ethernet Connection (Simple Procedure Manual)	One
11.	Gigabit Ethernet Interface Cable (LAN Cable)	One
12.	Ferrite core for AC cable	One
13.	Fitting ferrite core to the AC power cable (notice paper)	One

2.1.2. Accessories/Options

The following options are available for the system.

1. Remote Controller
2. LCD Remote Controller
3. Lens Mount with Filter Changer
4. 4 channel Output Trigger Box
5. Dedicated Carrying Case
6. Spare Power Supply Connector (for custom cable construction)
7. LAN Connector Anti-Dust Shell
8. F Mount Adapter
9. EF Mount Adapter

2.1.3. Type

For the FASTCAM SA-X2 system, there are monochrome and color versions, and EF mount option, for each of these versions, there are 8 GB standard memory capacity type and 16 GB (or 32GB, 64GB) high capacity type. When purchasing, it is possible to select from these models according to the application or your demands.
The Types are listed below.

Max. Frame Rate	Sensor Type	EF Support	Memory	Type Name
900,000fps	Color	Yes	8GB	FASTCAM SA-X2 type 1000K -C1E
			16GB	FASTCAM SA-X2 type 1000K -C2E
			32GB	FASTCAM SA-X2 type 1000K -C3E
			64GB	FASTCAM SA-X2 type 1000K -C4E
		No	8GB	FASTCAM SA-X2 type 1000K -C1
			16GB	FASTCAM SA-X2 type 1000K -C2
			32GB	FASTCAM SA-X2 type 1000K -C3
			64GB	FASTCAM SA-X2 type 1000K -C4
	Monochrome	Yes	8GB	FASTCAM SA-X2 type 1000K -M1E
			16GB	FASTCAM SA-X2 type 1000K -M2E
			32GB	FASTCAM SA-X2 type 1000K -M3E
			64GB	FASTCAM SA-X2 type 1000K -M4E
		No	8GB	FASTCAM SA-X2 type 1000K -M1
			16GB	FASTCAM SA-X2 type 1000K -M2
			32GB	FASTCAM SA-X2 type 1000K -M3
			64GB	FASTCAM SA-X2 type 1000K -M4

Supplement

- “RV (Range Version) type” is prepared for each model.
  It has be sealed-up a camera chassis for keep it free of dust.

2.2. Part Names

The system is composed of components including the camera body, AC power supply, and the "Photron FASTCAM Viewer" control software (referred to below as PFV).

For each of the system components.

- Do not expose to shock.
- Do not use in an area where flammable gas or dust present is present.
- Do not place in an unstable location such as on an unstable platform or an incline.
- Do not disassemble or modify.
- Do not expose to liquids such as water.
- Do not subject to excessive force.

2.2.1. Camera Body

The camera body contains IC memory for image recording and has been designed to be able to record high-speed images uncompressed. The back of the camera body is equipped with the video output terminals, which can playback the recorded images on a video monitor; the Gigabit Ethernet interface, which permits full camera control and data download possible via connection to a PC; the input/output connector, which allows external synchronization signals, trigger signals, IRIG time code.

Apperance

Rear

FASTCAM SA-X2

Apperance

Rear

FASTCAM SA-X2 RV

2.2.2. Camera Body Part Names

FASTCAM SA-X2

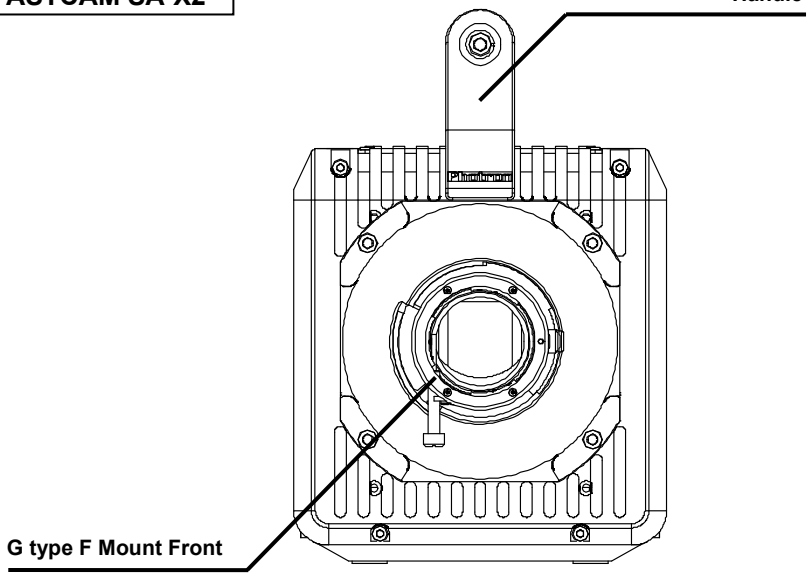

Front

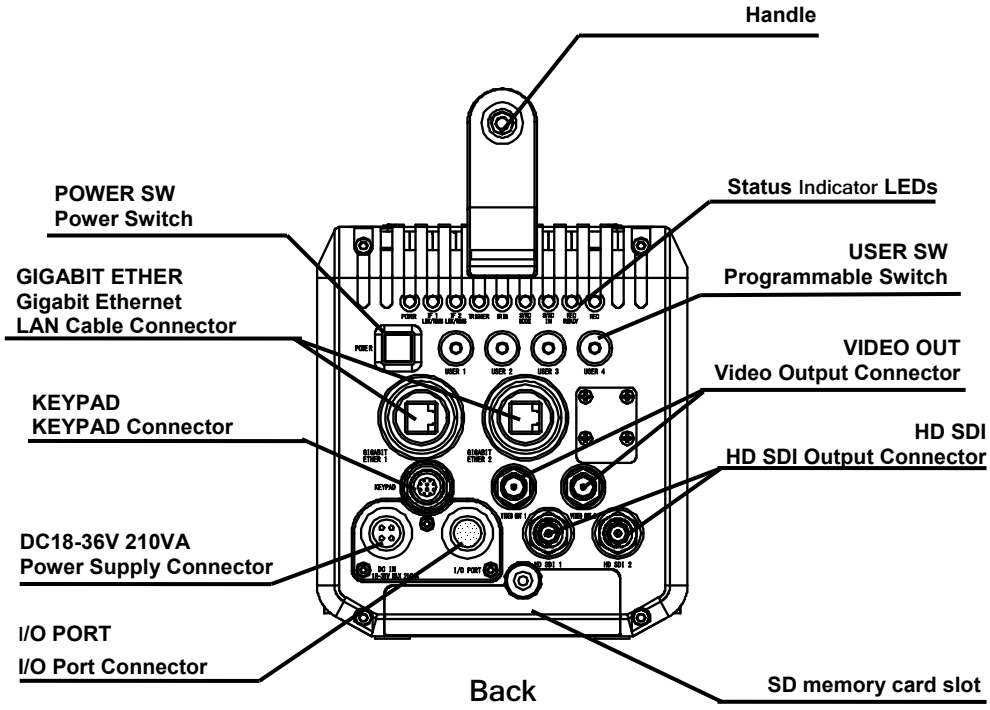

Back

FASTCAM SA-X2 RV

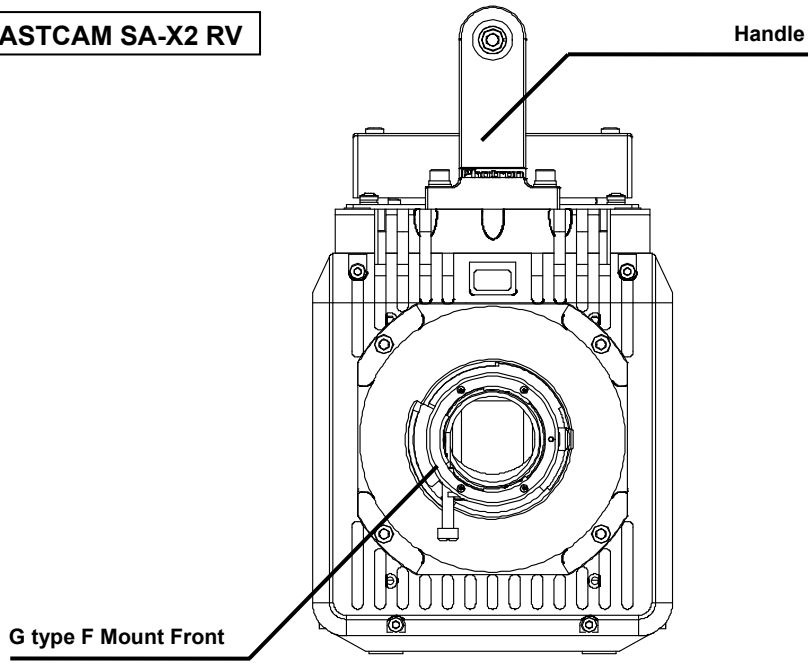

Front

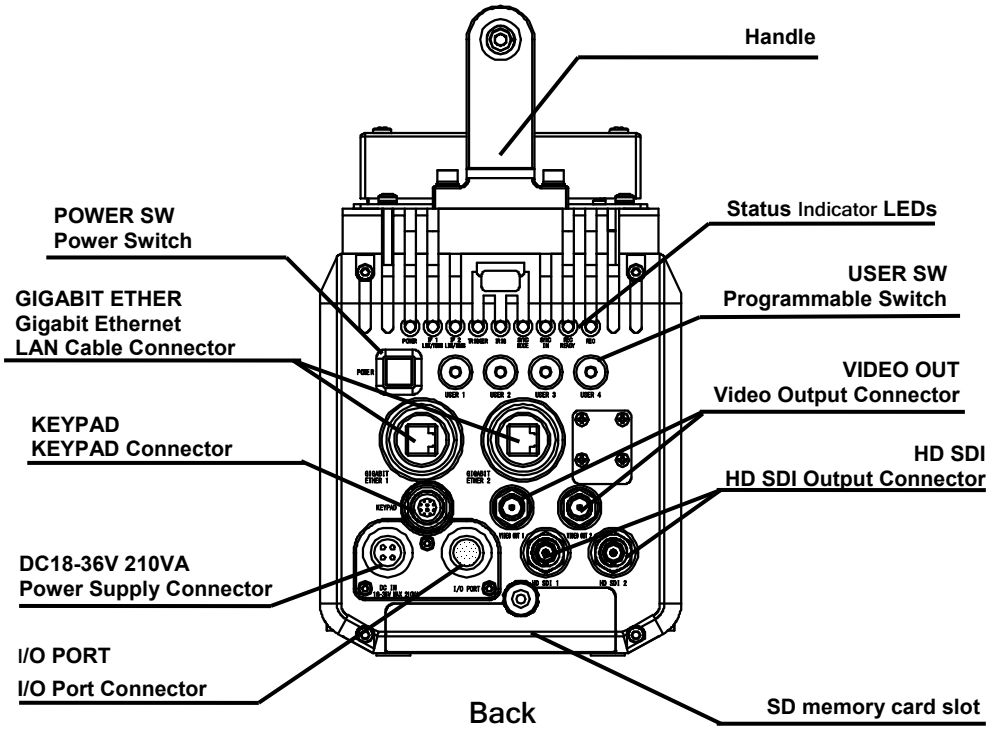

Back

2.2.3. Status Display LEDs on the Rear of the Camera Body

There are a number of LEDs on the rear of the system's camera body. These LEDs indicate the status of the system. The function of each LED is explained here.

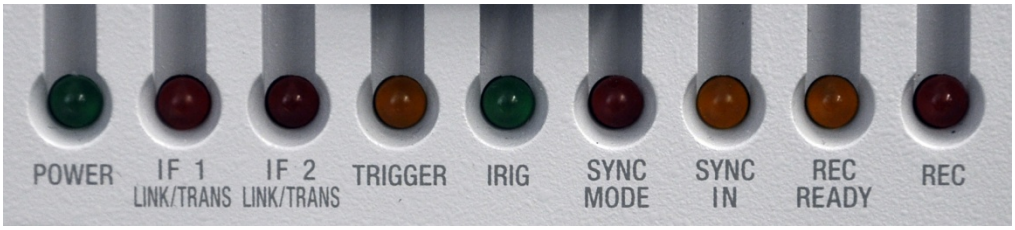

- POWER (Green)
  LED ON: Power On
  LED OFF: Power Off

- IF LINK/TRANS (Red)
  LED ON: The Gigabit Ethernet interface is connected
  LED FLASHING: Data is transferring
  LED OFF: The Gigabit Ethernet interface is not connected

- TRIGGER (Yellow)
  LED ON: A trigger signal is present (being input) (The LED will illuminate for 0.1 second when the trigger signal is input.)
  LED OFF: The trigger signal is not present

- IRIG (Green)
  LED ON: The IRIG/GPS signal is present (being input)
  LED OFF: The IRIG/GPS signal is not present

- SYNC MODE (Red)
  LED ON: In external synchronization mode (synchronized to an external signal)
  LED OFF: In internal synchronization mode (synchronized to the internal signal)

- SYNC IN (Yellow)
  LED ON: A synchronization signal is present (being input)
  LED OFF: A synchronization signal is not present

- REC READY (Yellow)
  LED ON: Ready to record
  LED FLASHING: ENDLESS recording (The REC (Red) LED is also flashing)
  LED OFF: Not ready to record

- REC (Red)
  LED ON: Ready to record (The case of “ENDLESS” recording mode)
  LED FLASHING: Recording
  LED OFF: Not recording

- Illumination/blinking in operational states
  - During low light mode operationLEDs other than POWER (green) and IF LINK/TRANS (red) blink at a regular interval.
  - When calibration is run from USER SW or the remote controller LEDs other than POWER (green) and IF LINK/TRANS (red) blink alternately from right to left three times and from left to right three times.
  - During the Gigabit Ethernet interface initialization LEDs other than POWER (green) and IF LINK/TRANS (red) blink alternately from right to left and from left to right a number of times.

Reference

- For how to initialize the Gigabit Ethernet interface, refer to "4.1.7. Gigabit Ethernet Interface Initialization", page 73.

2.2.4. Interchangeable Lens Mounts

The lens mount on the system can be changed according to the recording purpose.
There are 5 types of interchangeable lens mounts: “G type F-mount”, “Nikon F-mount”, “C-mount”, “EF mount” and “Lens Mount with Filter Changer” (optional).
The system has mechanical shutter as a standerd feature.

◆ How to change the lens mount (G type F-mount → C-mount)

1. Remove the four M5 bolts with the hexagonal holes using the hexagonal wrench.
2. Remove the G type F-mount portion as a unit.
3. Install the C-mount unit using the bolts with hexagonal holes in the 90° diagonal holes.
4. After installation, always verify that the unit is not loose and does not rattle.

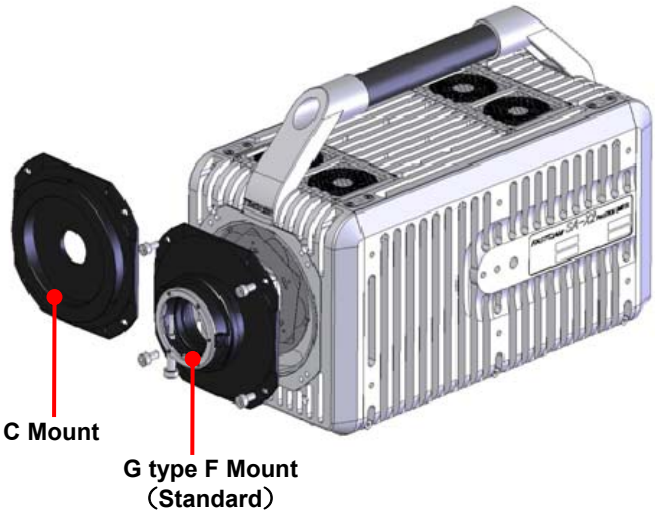

2.2.5. Remote Keypad (Optional)

The system can be operated while checking the monitor by connecting the optional remote keypad to the "KEYPAD" connector on the rear of the camera body. The remote keypad is also hot-pluggable; it can be plugged into and unplugged from the camera while the power is on.

Camera Body Connector	Signal	Camera Body Connector Model Name (Manufacturer)	Keypad Connector Model Name (Manufacturer)
KEYPAD	Keypad signal	G52L0C-P10QJ00-0000 (ODU)	S22L0C-P10MJG0-820S (ODU)

Supplement

- The remote controller is optional. It is not included in the standard configuration.

Reference

- For how to operate of the Remote Keypad, refer to "Remote Keypad User's Manual".

2.2.6. RS-422 Serial Control

The system supports serial control via an RS-422 connection through the "KEYPAD" connector.
By setting the [STATUS OUT] menu to ON, the system status can be output via the serial connection.
For details, check the command list.
Serial control commands are available as separate list of commands. Please contact Photron or the dealer where the system was purchased regarding the command list.
A cable is also not offered as an accessory. When using RS-422 control, construct a cable using the pin diagram below for reference.

Keypad Pin Diagram

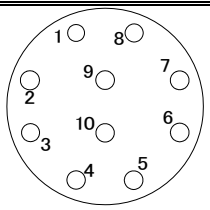

G52L0C-P10QJ00-0000

Connector Name	Signal Name	Pin No.	Camera Body Connector Model Name (Manufacturer)	Cable Connector Model Name (Manufacturer)	Input Connector
KEYPAD	VBS	1	G52L0C-P10QJ00-0000 (ODU)	S22L0C-P10MJG0-820S (ODU)	Not Specified
	GND	2			
	RXD+	3			
	RXD-	4			
	TXD+	5			
	TXD-	6			
	GND	7			
	TRIGGER SW	8			
	GND	9			
	+12V OUT	10			

When using the connector pins directly, refer to the chart above and ensure the wiring is correct. Incorrect wiring can cause malfunction.

The voltage on pin 10 (+12V OUT) is used to power the remote controller, do not use it for other purposes.

Reference

- For inquires related to our product, refer to “7.1. Contact Information”, page 98.

2.2.7. I/O Port Connector

The input/output signal connectors on the system have been bundled into a single connector, the "I/O PORT" connector, and it is possible to connect to and access each type of signal by using the specialized multi-connector. By inputting an external trigger or synchronization signal and by outputting exposure timing or synchronization signal, these signals can be used as a part of the system.

> A signal other than the specified signal must not be input to the various connectors.
> Use extreme caution as there is a risk of damage to both devices, the input device and the output device.

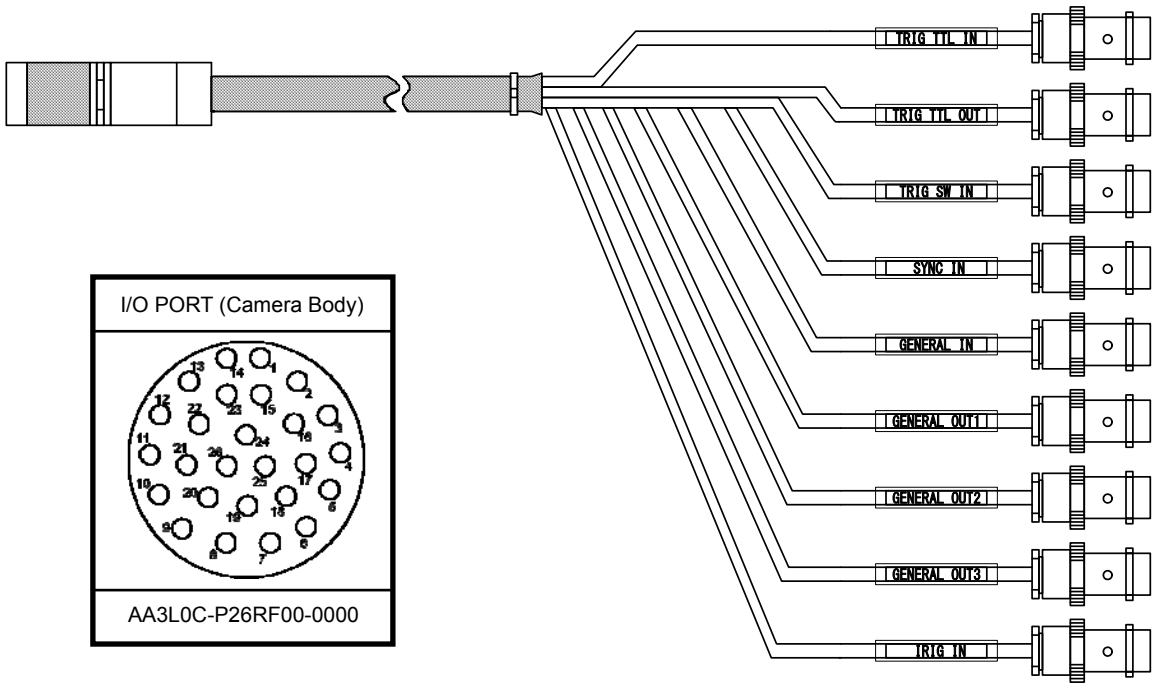

Reference

- For the signal which can be inputted, refer to “3.17. Input / Output Signal types”, page 46.

Connector Name	Signal Name	Pin No.	Camera Body Conector model No. (Manufacturer)	Cable Connector Model No. (Manufacturer)	Input Conector (Pin No.)
I/O PORT	GENERAL OUT2	1	AA3L0C-P26RF00-0000 (ODU)	K13L0C-P26LFD0-1900 (ODU)	BNC
	GENERAL OUT3	2			BNC
	GND	3			BNC
	RESERVE	4			BNC
	RESERVE	5			-
	RESERVE	6			-
	RESERVE	7			-
	RESERVE	8			-
	IRIG GND	9			-
	IRIG	10			-
	SYNC IN	11			-
	TRIGGER TTL IN	12			-
	TRIGGER TTL OUT	13			BNC
	GENERAL OUT1	14			BNC
	GND	15			-
	GND	16			BNC
	RESERVE	17			BNC
	RESERVE	18			-
	GND	19			-
	RESERVE	20			-
	GENERAL IN	21			-
	TRIGGER SW	22			-
	+18 - +36V	23			-
	+18 - +36V	24			-
	+18 - +36V	25			-
	GND	26			-

Supplement

- Pin 3,15,16,19,26's GND signal is the common ground for BNC.

2.2.8. Power Supply Connector

The DC power supply input connector. Connect to the supplied AC adapter or the optional High-G Battery.
The cable connector is optionally available. When using other power supplies, construct a cable using the pin diagram below as a reference.

DC 18-36V 210VA Pin Diagram
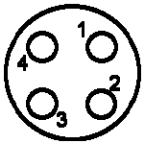
AA3L0C-P04RT00-0000

Connector Name	Signal Name	Pin No.	Camera Body Connector Model Name (Manufacturer)	Cable Connector Model Name (Manufacturer)
DC18-36V 210VA	+18V～+36V IN	1	AA3L0C-P04RT00-0000 (ODU)	K23L0C-P04LTQ0-520S (ODU)
	GND	2		
	GND	3		
	+18V～+36V IN	4		

Warning

When using the connector pins directly, refer to the chart above and ensure the wiring is correct.
If the wiring is incorrect, not only is there the danger of the system malfunctioning, but also of fire and electric shock.

Warning

Do not use a power supply which does not meet the system's specifications, or a power supply you cannot guarantee the safety of.
By using a power supply outside of the system specifications, not only is there the danger of the system malfunctioning, but also of fire and electric shock.

2.2.9. SD Memory Card Slots

These slots are for a SD Memory Card to save image data. Insert a SD Memory Card which is on the market.

Reference

- Refer to “SD Memory Card User’s Manual” for the details of operation.

Supplement

- If a SD Memory Card’s performance is not enough the required specifications, there is possibility that the writing speed will become slow and/or there will be an error. Refer to “SD Memory Card User’s Manual” for the required specifications.

2.3. Device Connections

2.3.1. Connecting a Video Monitor

Connecting video monitors to the system for checking the live image (camera pass-through image). Connect a video input connector on a video monitor to the “VIDEO OUT” connector or the “HD SDI” connector with a BNC cable according to the type of video signal to display.
Connectors that output the signals are selectable from the PFV software or the optional remote keypad.

NTSC	1080i	60Hz , 59.94Hz
	1080p	30Hz , 29.97Hz , 24Hz , 23.98Hz , 24Hz(sF) , 23.98Hz(sF)
PAL	1080i	50Hz
	1080p	25Hz , 24Hz , 23.98Hz , 24Hz(sF) , 23.98Hz(sF)

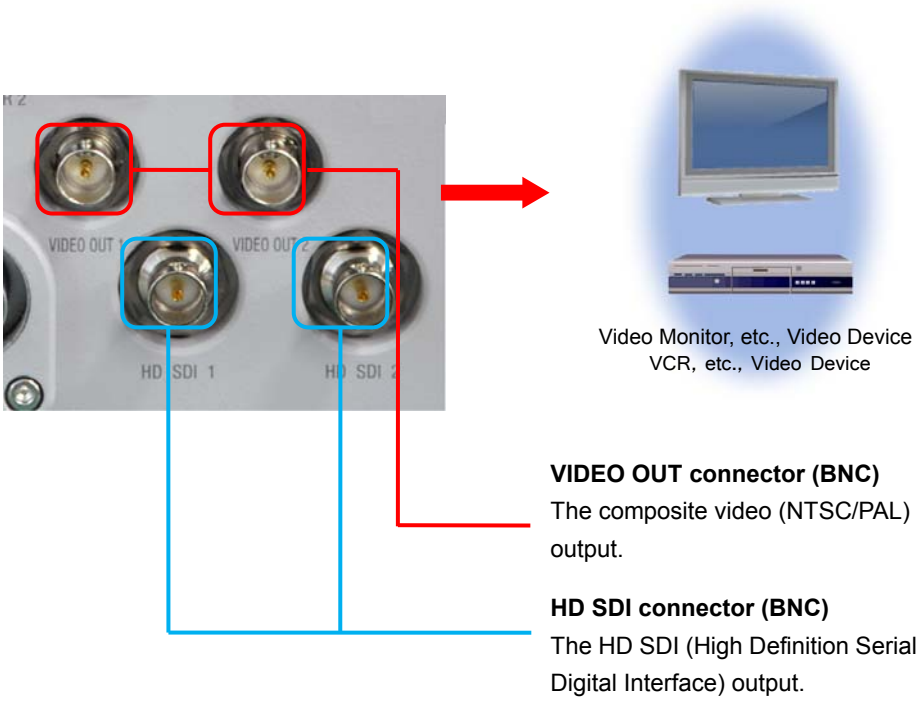

Supplement

- Since the output of composite video/HD SDI is exclusive, color bars are displayed on the output not selected. (Color bars are a reference guide).
- One of the connectors can switch the output signal between Live mode and Memory mode, and the other connector will always output Live signal simultaneously.
- Use 5C-FB specification cables for HD SDI output.

2.3.2. Connecting the AC Power Supply

Connect the supplied AC power supply unit to the power supply.

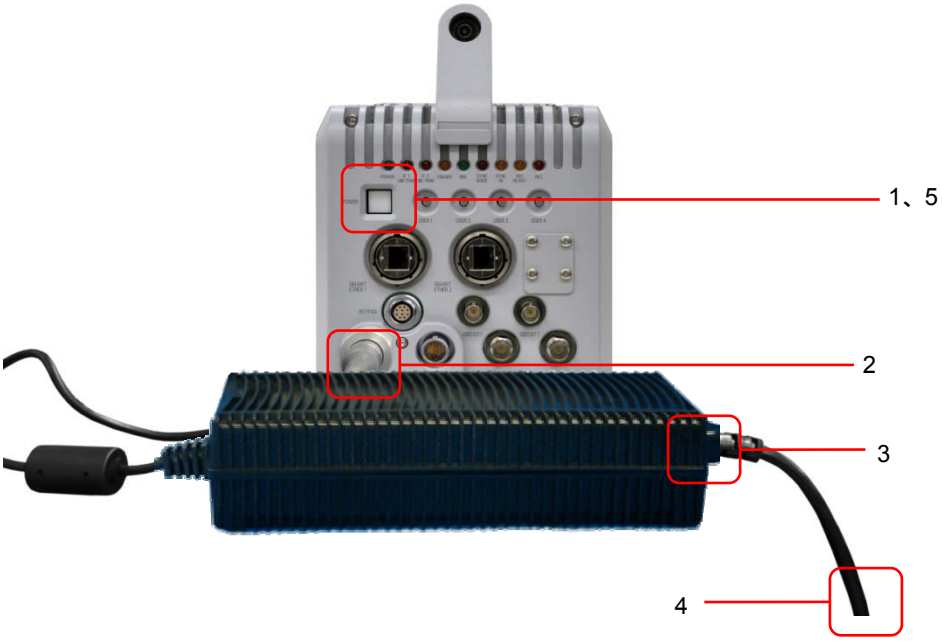

1. Confirm the Power SW is turned off.
2. Connect the AC power supply unit to the “DC18-36V 180VA” connector on the back of the camera body.
3. Connect the AC cable to the AC power supply unit.
4. Connect the AC cable to the power outlet.
5. Turn on the Power SW one the system.

Reference

- For the specification of the power supply which can be used, refer to “5.1.2. General Specifications”, page 77.

2.3.3. Connecting the Keypad (Optional)

If you have the optional Keypad or LCD Keypad, connect it by plugging the Keypad connector into the connector labeled "KEYPAD" on the rear of the camera body.

Supplement

- The Keypad is hot-pluggable. It can be plugged in and removed while the system's power is on.

Reference

- For how to operate of the Keypad, refer to "Remote Keypad User's Manual".

2.3.4. Connecting a PC

The system can have the operation of its functions performed from a PC using the Gigabit Ethernet interface.

This section explains the required setup when connecting the system to a PC.

To connect a PC to the system, connect the system to a commercially available 1000BASE-T-compatible interface board with a LAN cable. For the LAN cable, prepare a UTP or STP CAT5E (enhanced category 5) or higher category LAN cable. (UTP: Unshielded Twisted Pair, STP: Shielded Twisted Pair)

The maximum cable length between the PC and the system is 100 m (compliant to the 1000BASE-T specification). One PC can connect to a maximum of 64 Photron Gigabit Ethernet interface equipped cameras using a hub. When connecting multiple devices, connect through a switching hub that can connect at 1000BASE-T. The maximum length of the cable that connects the system (or PC) to the switching hub is also 100 m.

Reference

- For operating instructions of Photron FASTCAM Viewer software, refer to "Photron FASTCAM Viewer User's Manual".

Chapter. 3 **Recording**

3.1. Image Initialization (Calibration)

3.2. Selecting the Frame Rate

3.3. Selecting the Resolution

3.4. Selecting the Shutter Speed

3.5. Dual Slope Shutter

3.6. Auto Exposure

3.7. Image Trigger

3.8. Selecting the Trigger Mode

3.9. LOW LIGHT Mode

3.10. VARIABLE Setting

3.11. White Balance Adjustment (Color Models Only)

3.12. Color Enhancement Function (Color Models Only)

3.13. Look-Up Table (LUT) Operations

3.14. Edge Enhancement Function

3.15. Partition Memory & Record

3.16. Simultaneous Replay/Record Function

3.17. Input / Output Signal Types

3.18. Using External Triggers

3.19. Using External Synchronization Signals

3.20. GENERAL Signal Settings

3.21. Signal Delay

3.22. Event Marker Function

3.23. Using Programmable Switch (USER SW)

3.24. IRIG Time Code (External Time Synchronization)

3.25. IRIG-sync Operation

3.26. Direct Trigger / Direct Start Mode

3.1. Image Initialization (Calibration)

In order to maximize the high image quality of the system, it is necessary to correct the non-uniformity in each pixel that is inherent in the image sensor.
The system is equipped with a function to correct the output value for each pixel using the black level as a standard. Using a uniform black image as the standard, each pixel's black level is set to zero. This makes it possible to obtain faithful image output for the input light level.

Important

- In order to obtain faithful image output, execute calibration when the following settings are changed.
  - ■ When the frame rate is changed
  - ■ When the shutter speed is changed
  - ■ When the resolution is changed

  Also, depending on the settings, phenomena such as the following may occur.
  - ■ Fixed noise like horizontal bands appears
  - ■ A portion of the screen is clear, but noise appears in the area around it

  These phenomena can be resolved by executing calibration again.

3.1.1. Executing Calibration

Calibration is executed from the "Keypad (optional)" or from PFV.

Reference

- For the procedure of performing this function, refer to "Remote Keypad User's Manual" or "Photron FASTCAM Viewer User's Manual".

3.1.2. Saving Calibration Settings

.The system can save a correction data which is obtained by executing the calibration.

Supplement

- The save process might take a few minutes.

3.1.3. Loading Calibration Settings

Loading and applying the image correction data which hae been saved on the system.

3.1.4. The operation of the Mechanical shutter

When using the Mechanical shutter, there is no need to shade the light since the shutter will close automatically when carrying out a calibration.

Caution

- Mechanical shutter option physically restricts available dimension of C-mount lens.
  - Projection from the lens mount flange plane (a): maximum 4 mm
  - Diameter (b) :maximum 80 mm

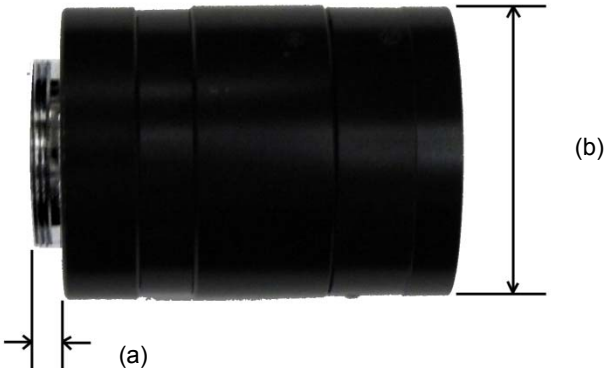

3.2. Selecting the Frame Rate

Images can be recorded with the system from 60 fps (50 fps with PAL) to 12,500 fps using the full 1,024x1,024 pixel resolution of the image sensor. For frame rates higher than 12,500 fps, high-speed recording is achieved by limiting the read area of the image sensor. Binning is NOT used.

Supplement

- The minimum frame rate in NTSC mode is 60 fps.
- The minimum frame rate in PAL mode is 50 fps.

3.2.1. Switching Frame Rate (13.5K mode Function)

This camera has two different frame rate setting modes, which can be switched from one to the other as needed. The 13.5K mode is set ON by default. By setting it OFF, however, the system can be operated with higher image quality.
The details of each mode are shown below:

- 13.5 K Mode ON
  - The maximum frame rate is 900,000 fps (with image resolution of 128 x 8 pixels).
  - When full frame: 12,500fps max.
  - The image resolution is slightly higher than that of the 13.5 K mode “OFF” at the same frame rate.
- 13.5 K Mode OFF
  - The maximum frame rate is 324,000 fps (with image resolution of 128 x 16 pixels).
  - When full frame: 10,000fps max.
  - The image resolution is slightly lower than that of the 13.5K mode “ON” at the same frame rate.
  - .The image quality of the 13.5K mode “OFF” can be higher than that of the 13.5K mode “ON” at the same frame rate.

Reference

- The user may choose either mode depending on the frame rate and image quality required by the particular application.
  Table of frame rates and image resolutions, refer to “5.1.4. Frame Rate and Resolution”, page 80.

Important

- There may be adverse effect introduced to the image quality (such as horizontal line-like noise) when the frame rate or shutter speed is changed. To eliminate such a defect, calibration must be carried out before resuming a recording with a new setting of frame rate and/or shutter speed (refer to “3.1.1. Executing Calibration. Frame Rate and Resolution”, page 24).

3.3. Selecting the Resolution

The maximum resolution of the image sensor is 1,024 x 1,024: total 1,048,576 pixels. By reducing the resolution, images can be taken with even faster frame rates, or the recording duration can be extended accordingly.

Reference

- For more information of relation between Frame Rate and Resolution, refer to “5.1.4. Frame Rate and Resolution”, page 80.

3.4. Selecting the Shutter Speed

The shutter speed (Exposure time) is independent of the frame rate, and it is possible to control the exposure time in the frame using the electric shutter. By making an exposure that is of a shorter period than the frame rate, high-speed objects can be photographed blur-free.

The longest setting values of the shutter speed are as following:

- Frame rate is lower than 1,000 fps: 1/1,000 sec (1 msec)
- Frame rate is 1,000 fps or higher: one step shorter shutter speed setting than '1/frame' second.
  (Please refer to the following Supplement part for the example)

The shortest setting value of shutter speed is 1/3,410,526 sec (approx. 293 nsec).

When “Uncertain Interval Extension” is enabled, it is shown 1/1,012,500 sec), and the EXPOSURE (POS / NEG) signals are output on this timing.

(Please refer to the following Important part for the details)

Supplement

- For example, when working under 500fps, the available shutter speed varies from 1/1,000 to 1/996,923 second.

  When working under 2000fps, a shutter speed varying from one faster step than 1/2,000 second, 1/2,020 second, to 1/3,410,526 second can be obtained.

Caution

- The numerical value of [0.xxx S] display serves as actual exposure time.
- The numerical value of [1/xxx S] display is round figure. It differs from actual exposure time a little.

Reference

- For more information of Shutter Speed, refer to “5.1.5. Shutter Speed List (uncertain interval extension: Disable)”, page 84 and “5.1.8. Shutter Speed List (13.5K mode OFF / uncertain interval extension: Enable)” page 87.

Important

- The exposure starts at the rising edge of the EXPOSE POS signal (or the falling edge of the EXPOSE NEG signal). The exact exposure end point is on the preceding of the falling edge of the EXPOSE POS signal in the range of maximum ⊿t seconds from the falling edge (referred to below as exposure uncertain interval). The position of the point varies according to the integral of the quantity of light input on the exposure indefinite interval. The relation between the light input and the output of the camera is non-liner during the exposure uncertain interval. The red diagonal areas on the following timing chart show the exposure uncertain intervals.
- Exposure uncertain interval ⊿t depends on a condition as below.

Condition	Exposure uncertain interval
13.5K mode ON and “~720,000fps”	Approx. 700nsec
13.5K mode ON and “720,001fps~”	Approx. 360nsec
13.5K mode OFF	Approx. 1.11usec

- It is possible to exclude the uncertain interval with the setting. (It is excluded at the factory default setting.) The exclusion is applied to just for the shutter speed display and the EXPOSE POS/NEG signal, the exposure uncertain intervals are remains still actually.

■ EXPOSE POS signal: the ‘uncertain interval extension’ is enabled

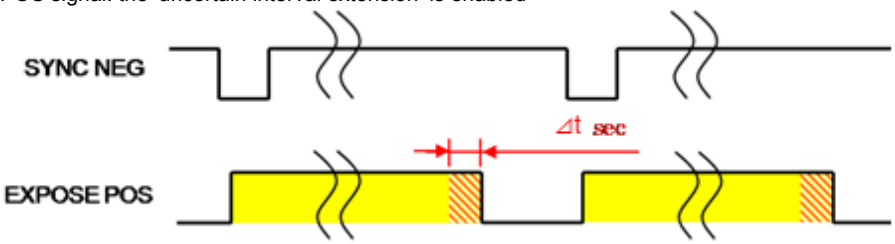

■ EXPOSE POS signal the: The ‘uncertain interval extension’ is disabled

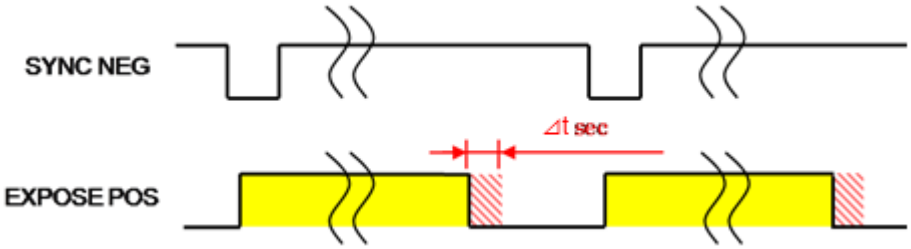

3.5. Dual Slope Shutter

DS SHUTTER is a mode that records the high brightness portion and low brightness portion in one image at the same time by adjusting the light exposure internally in the sensor. By using this function, when recording a subject with an extremely large difference in the brightness in the image, the sensor functions so that it can record at the proper light exposure for both the high brightness and low brightness portions.
The light exposure adjustment can be set from 0% to 95% in 5% increments according to the subject to be recorded.

Caution

- This function cannot be used with the operations below.
  - ■ When the trigger mode is RANDOM RESET
  - ■ Auto Exposure Function
- When using the DS SHUTTER function on a color model, there are situations where the colors become unbalanced and the color reproducibility degrades.

Supplement

- The amount of adjustment is expressed as %.For the strength of the adjustment, 0% is no adjustment, 95% is the maximum effect.

3.6. AUTO EXPOSURE Operation

The system has a function that automatically varies the shutter (the sensor's exposure time) for the quantity of light input so that it will achieve the desired image output level.

After the settings are made once, in a situation where settings cannot be changed, this function displays its effect when recording in an environment where the subject's amount of light changes.

When using this function the following four items must be set in advance.
"AREA", "TARGET VALUE", "RANGE", "SHUTTER"
Each of these settings is explained below.

- AREA
  Sets the image area.
  The auto exposure function operates so that the average value of the image output level in the area specified here becomes the desired image output level.

- TARGET VALUE
  Sets the desired image output level. Set this value as a 10-bit gradation (0-1023).

- RANGE
  Gives the desired image output level a range. Set this value as a 10-bit gradation (0-1023).
  The auto exposure function operates so that the average value of the image output level in the area specified here becomes the desired image output level.

- SHUTTER
  Sets the maximum exposure time. Set in order to prevent subject blur from an exposure time that is too long.

Important

- The Auto Exposure function keeps a constant image brightness by varying the shutter speed (sensor's exposure time).
  Therefore, the image may deteriorate as the shutter speed varies from the calibrated setting while using this function.
  Please refer to "3.1. Image Initialization (Calibration) ", page 24 for details.

Important

- When the auto exposure function is operating, the camera will not perform a shutter operation with an exposure time longer than the shutter value set here.

  These settings are shown in the diagram below.

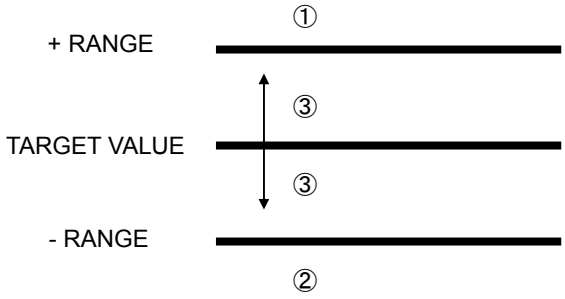

  If the image level being output (the average value of the area set with AREA) is ①, ②, or ③, the function operates as below.

  - For position ①
    Since the image level being output is higher than the range TARGET VALUE±RANGE, the function operates to close the shutter (shorten the exposure time).

  - If position ②
    The image level being output is lower than the range **TARGET_VALUE±RANGE**, so the function operates to open the shutter (lengthen the exposure time).

  - If position ③
    The image level being output is within the range of **TARGET_VALUE±RANGE**, so the operation of the shutter is not varied.

- The DS SHUTTER function is inactive while the AUTO EXPOSURE function is being used.
- When the RANGE setting is a small value, the range of the desired image output level narrows.

- If the RANGE value is made smaller than necessary, the image level is difficult to place in the desired ③ position.
  In this case, the variable shutter operation cannot place the image level in the desired ③ position and a phenomenon occurs where the image output level is unstable.
  When a situation like this occurs, it can be resolved by making RANGE a larger value.

3.7. Image Trigger

This system has a function that automatically activates trigger when the target object area hits a predetermined image output level. This is a handy function to use when you shoot a high-speed event that does not output an effective triggering signal, or when you wish to simply automate a recording without using an external trigger signal.

The use of this function requires the following three settings to be made in advance:
AREA, REFERENCE and RANGE
Each of the above three items will be described in this section.

- AREA
  Sets a field of interest within an image to be recorded.
  The Image Trigger function activates trigger by using the averaged level of image output signal within the field of interest set here.

- REFERENCE
  Sets the reference value of the image output signal level as criterion. The value is set by the 10-bit (0 to 1023) scale.

- RANGE
  Gives a range to the reference value of image output level set in the above step, REFERENCE. The value is set by the 10-bit (0 to 1023) scale.
  The Image Trigger function activates trigger if and when the average value of image output level within the field set in the AREA step goes out of the range of “REFERENCE ± RANGE” values.

Important

- The reaction speed of the Image Trigger depends on the repeating rate of video (1/23.98 to 1/60 depending on the video format).
- The Image Trigger is an auxiliary functionality that activates trigger based on the background difference within the field of view while waiting for an occurrence of a target event. There is an inevitable possibility that the system fails to trigger in the timeliest manner to capture short living events. Therefore, the use of this functionality is NOT advisable to record important experiments involving once –a -century type or very expensive events.

Important

- The Image Trigger function responds when the level of output image signal (averaged value within the field set in the above AREA step) is on the line ① or ②.

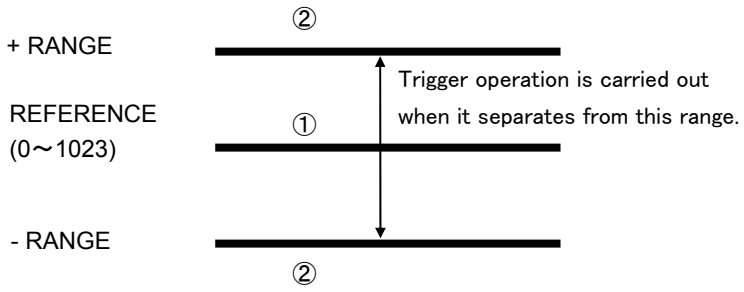

When the output image signal level (averaged value within the field set in the above AREA step) is in the position ① or ②, the system responds as follows:

- When the output level is in position ①:
  The system does not activate trigger because the level is within the predetermined range.

- When the output level is in position ②:
  The output level must first return to position ① and then the system activates the trigger at the moment the level hits or goes beyond position ②.

- If the level moves ①→②→①→②→①→②, the system responds every time the level goes from ① to ②. In this example, trigger is activated three times.

3.8. Selecting the Trigger Mode

In order to reliably capture high-speed phenomena, many kinds of trigger modes have been made available. These trigger modes are explained next.

There are eight types of trigger modes which are listed below.

- START	- CENTER	- END	- MANUAL
- RANDOM	- RANDOM RESET	- RANDOM CENTER	- RANDOM MANUAL

3.8.1. START Mode

START mode is a trigger mode where recording starts the instant the trigger is input, the scene is recorded until the memory is full, and then recording ends. This mode is suitable for taking images of high-speed phenomena when what will happen, and when it happens, is known in advance.
For example, in a situation with a maximum useable memory of two seconds of recording, two seconds of high-speed video is saved immediately after the trigger is input.

3.8.2. CENTER Mode

CENTER mode is a trigger mode where an equal amount of content recorded before and after the trigger is input is saved to memory. This mode is suitable for viewing before and after an important instant. For example, in a situation with a maximum useable memory for two seconds of recording, one second before and one second after the trigger was input is recorded for a total of two seconds of high-speed video.

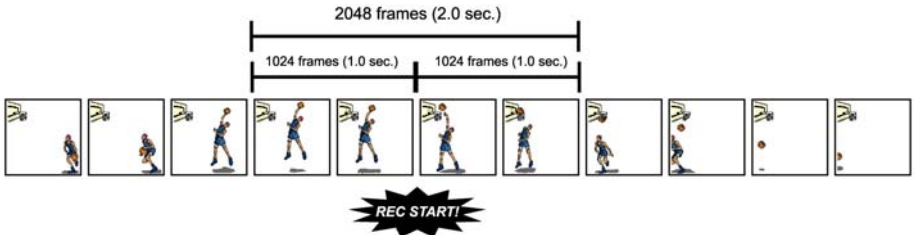

3.8.3. END Mode

END mode is a trigger mode where the content recorded immediately before the trigger is input is saved to memory. This mode is suitable for recording a high-speed phenomenon where it is hard to predict when the important action will start and stop. For example, in a situation with a maximum useable memory for two seconds of recording, the two seconds of high-speed video immediately before when the trigger was input are saved.

3.8.4. MANUAL Mode

MANUAL mode is a trigger mode, similar to CENTER mode, where the content recorded before and after the trigger is input is saved to memory, but the proportion of time before and after the trigger can be set as required. For example, in a situation with a maximum record time of two seconds, 0.5 seconds before and 1.5 seconds after the trigger is input are recorded and saved, a total of two seconds of high-speed video.

3.8.5. RANDOM Mode

RANDOM mode is a trigger mode where each time a trigger is input only a predetermined number of frames are saved to memory. For example, this function is convenient for a subject which is an irregular and repeated phenomenon which can have a trigger output produced for each cycle or occurrence. The number of frames recorded each time the trigger is input can be set as desired, in one frame increments, from one frame to the maximum of all the recordable frames available.

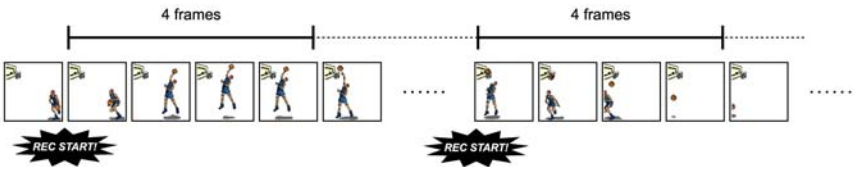

3.8.6. RANDOM RESET Mode

RANDOM RESET mode is explained here by comparing its operation with the normal mode. RANDOM RESET mode is a mode to improve the temporal accuracy of the record start timing and the timing of the trigger input, where, to put it simply, with the input of the trigger signal, at the timing that it is input, the camera's record timing is reset.

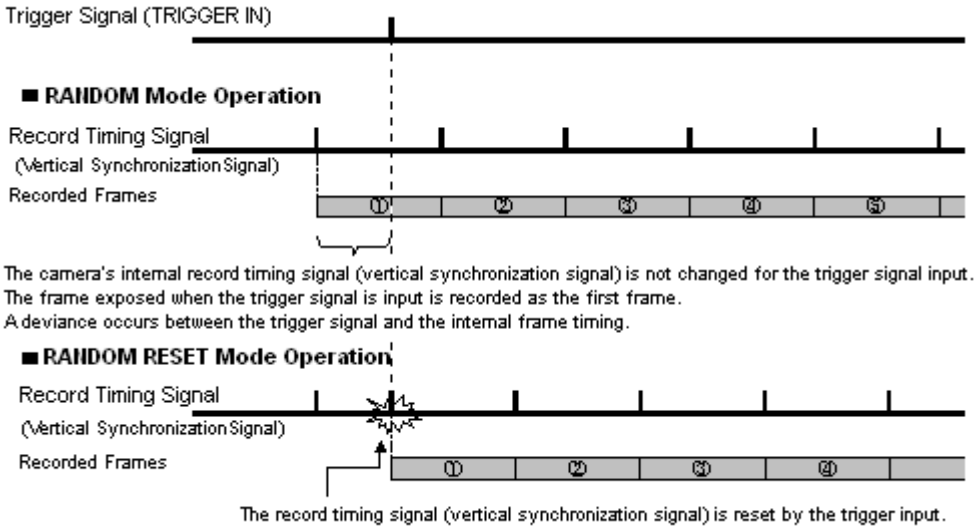

When the camera is set to the normal RANDOM mode (the same as START mode) and RANDOM RESET mode, the difference in the recording operation for the trigger input is shown graphically.
In the normal RANDOM mode and START mode, the camera starts recording when the trigger is input, but the internal record timing signal is independent and it operates regardless of when the trigger is input. For this reason, there may be situations where the start time of the first frame when the trigger is input is advanced almost a full frame. The range of this overlap also cannot be known.
On the other hand, in RANDOM RESET mode, the camera's internal record timing signal is reset by the trigger input and operates anew. For this reason, the trigger input time and the timing of the start of the first frame are the same. The interval from when the trigger is input until the exposure begins is approximately 1.75 us.

Caution

- When you perform continuation photography using a random reset mode, please prepare the interval of at least 1 or more Frame.
  (In 1000fps, the interval of 1/1000 sec is required)

3.8.7. RANDOM CENTER Mode

RANDOM CENTER mode is a trigger mode, similar to RANDOM mode, where each time a trigger is input only a predetermined number of frames are saved to memory. The difference between this mode and RANDOM mode is that in RANDOM mode the number of specified frames are recorded directly after the trigger signal, whereas in RANDOM CENTER mode, at the timing of the trigger signal, the frames before and after the trigger remain in the recording memory. For example, this function is convenient for a subject which is an irregular and repeated phenomenon which can have a trigger output produced for each cycle or occurrence, and you want to check the action before and after the trigger timing. The number of frames recorded each time the trigger is input can be set as desired, in one frame increments, from one frame to the maximum of all the recordable frames available.

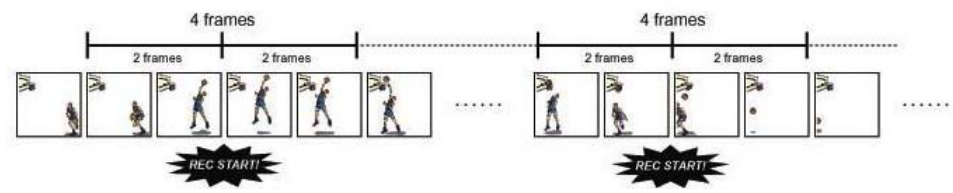

- Setting the RANDOM CENTER mode frame count

  Setting the frame count in RANDOM CENTER mode is the same as setting the frame count for RANDOM mode.

- Setting the RANDOM CENTER mode record count

  The number of trigger inputs that can be accepted in RANDOM CENTER mode is a maximum of 10. Set the number of trigger inputs in advance, and the recording operation can be ended when that amount of trigger inputs is finished.

Reference

- For how to setup of RANDOM Mode, refer to “3.8.5. RANDOM Mode”, page 35.

3.8.8. RANDOM MANUAL Mode

RANDOM MANUAL mode is a trigger mode, similar to RANDOM mode, where each time a trigger is input only a predetermined number of frames are saved to memory. The difference between this mode and RANDOM mode is that in RANDOM mode the number of specified frames are recorded directly after the trigger input, whereas in RANDOM MANUAL mode, at the timing of the trigger input, the frames before and after the trigger, each specified as desired, remain in the recording memory. For example, this function is convenient for a subject which is an irregular and repeated phenomenon which can have a trigger output produced for each cycle or occurrence, and you want to check the action before and after the trigger timing. The number of frames recorded each time the trigger is input can be set as desired, in one frame increments, from one frame to the maximum of all the recordable frames available.

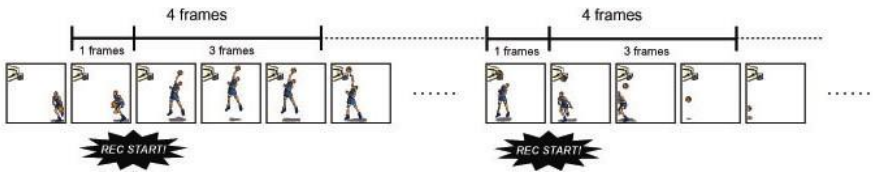

- Setting the RANDOM MANUAL mode record count

  Setting the record count in RANDOM MANUAL mode is the same as setting the record count for RANDOM CENTER mode.

- Setting the RANDOM MANUAL mode frame count

  To use RANDOM MANUAL mode, the proportion of frames to record before and after the trigger must be set in advance before recording.

Reference

- For how to setup of RANDOM Mode, refer to “3.8.5. RANDOM Mode”, page 35.

3.9. LOW LIGHT Mode

The more you increase the frame rate or shutter speed of the camera, the more the amount of light entering the camera decreases, making the displayed image darker. Low light mode is a function that temporarily increases the exposure time, making the displayed image easier to see to enable you to focus and setup the camera.

The default shutter speed of this product is 1/60 second.

3.10. VARIABLE Setting

In the recording conditions settings, the frame rate and resolution can be set to the desired value following the conditions listed below.

- FRAMERATE can be set from 72 frame rates between 60 fps (50 fps for PAL) and 259,200 fps.
- The size and horizontal position of the resolution can be set in 64 (horizontal) and 8(vertical) increments.

Supplement

- The area cannot be moved to the vertical / horizon direction at the variable setting of the system.
- VARIABLE settings made in the each 12.5K mode ON/OFF cannot be read in the other mode, and vice versa. All settings that cannot be read are displayed gray.

3.11. White Balance Adjustment (Color Models Only)

On digital video cameras, photographing white as pure white is described as "having the appropriate white balance." On the system's color models as well, in order to take images with the correct color representation, the white balance must be adjusted for the color temperature of the light source used. The intensity of each color, R, G, and B, can be adjusted on this system. By adjusting the balance of those three colors to match the light source used, the appropriate white balance can be achieved. Two methods are available for adjusting the white balance, preset and user-editable white balance. These methods are explained in this section.

3.11.1. Using Preset White Balance (Color Models Only)

With the system, there are two types of white balance presets (5100K, 3100K) for use with common light sources. The suggested color temperature for these presets is listed below.
5100K (Daylight, Outdoors)
3100K (Halogen Light Source)

3.11.2. Using User White Balance (Color Models Only)

User white balance can be set in order to achieve the most appropriate white balance for the light source used with the system and the conditions during recording.
The values set here are stored in the camera body's internal memory as the user preset, and they can be loaded by selecting USER.
There are also two methods for setting user white balance, AUTO USER and EDIT USER.

3.12. Color Enhancement Function (Color Models Only)

Color models feature an image color enhancement setting. The image color enhancement level can be adjusted in five steps, including the OFF setting.

Menu Display	Contents
OFF	Turns the color enhancement mode off
x 0.5 (LEVEL1)	Sets x0.5 color enhancement
x 1 (LEVEL2)	Sets x1 (default) color enhancement
x 1.5 (LEVEL3)	Sets x1.5 color enhancement
x 2 (LEVEL4)	Sets x2 color enhancement

3.13. Look-Up Table (LUT) Operations

The LUT (Look-Up Table) refers to a reference table that defines the relationship between the pixel brightness gradation of the original image data taken and the brightness gradation displayed on a computer screen or video monitor.
The system contains a hardware LUT function, and you can display the image data taken with improved contrast (light and dark sharpness) or make an object in the image stand out by emphasizing a specified gray level range.
The LUT in the system and the relationship between it and video output and the PC software is explained below.

Caution

- When an image is saved with its brightness converted with the LUT, the image saved is the image that has had its brightness converted.

◆ D1: Gain 1x

The input is always linear output. This LUT is used for normal conditions.

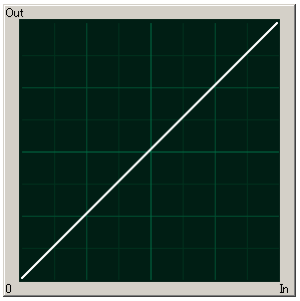

◆ D2: Gamma 0.6

This LUT is 0.6.gamma correction

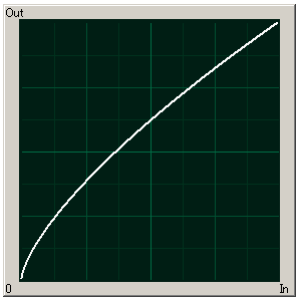

◆ D3: Gamma 0.45

This LUT is 0.45 gamma correction.

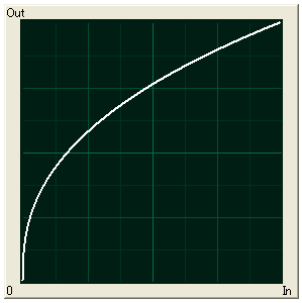

◆ D4: Gain 2x

The gain is doubled and you can display the dark areas of the image emphasized.

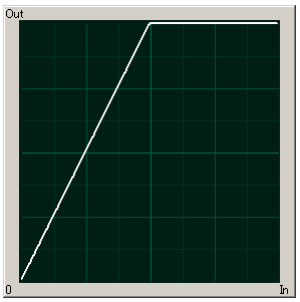

◆ D5: Gain 4x

The gain is doubled and you can display the dark areas of the image emphasized. This LUT emphasizes the dark portions even more than D4.

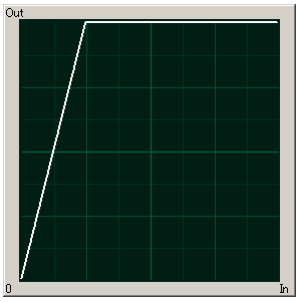

◆ D6: Reverse Gradation

The input gradation is reversed and then displayed.

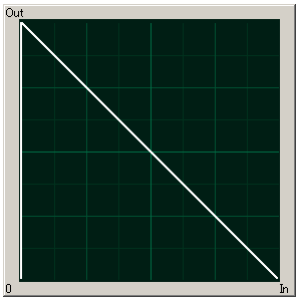

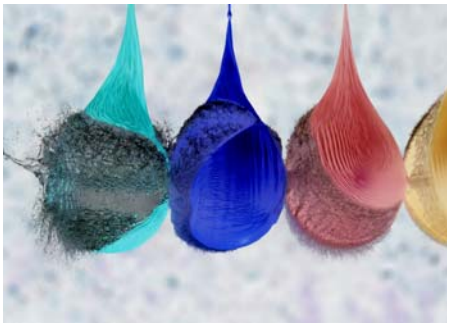

3.13.1. Using a Custom LUT

Creating a LUT pattern is done with PFV.

Reference

- For the creation method of a LUT pattern, refer to “Photron FASTCAM Viewer User's Manual”.

3.14. Edge Enhancement Function

With the system's edge enhancement setting, you can enhance the edges in the recorded image in three steps.

Menu Display	Contents
OFF	Edge enhancement off.
LEVEL1	Edge enhancement set to weak.
LEVEL2	Edge enhancement set to medium.
LEVEL3	Edge enhancement set to strong.

3.15. Partition Memory & Record

The system contains internally 8 GB standard, or a maximum of 32 GB, of high-capacity memory for recording use.
This recording memory can be partitioned and assigned to each recording. Memory is partitioned into equal sizes and a maximum of 64 partitions can be set. The partitioned sections are managed by ID numbers.
Each section can be set with completely independent recording conditions, so this feature is convenient when taking consecutive recordings with changed conditions.

3.16. Simultaneous Replay/Record Function

With this system, the data recording memory may be divided into two active sections, which allows the user to record an ongoing event into one of the sections while replaying the image recorded in the other section.
Simultaneous recording and replaying reduces the waiting time for completion of a recording, while replaying the image already recorded on the other section for confirmation.

Reference

- For detailed explanation of using the function, please look into the Remote Controller Users' Manual.

Supplement

- To use the simultaneous replay/record function, two sets of video or HD SDI monitors are necessary.
  (It cannot be used with a combination of a video monitor and an HD SDI monitor)

3.17. Input / Output Signal Types

With the system, many signals can be input and output through the I/O cable. Signals that can be input and output from the I/O cable are listed below.

A signal other than the specified signal must not be input to the various connectors.
Use extreme caution as there is a risk of damage to both, the input device and the output device.

3.17.1. TRIG TTL IN Connector

The system recognizes an external TTL signal as a trigger during the READY or ENDLESS recording state. Starting and stopping recording (in the selected recording mode) is controlled with this signal.
Input voltage is 0V to +12V (H level +2.5V to +12V), positive or negative polarity, pulse width is 200 ns or greater.

3.17.2. TRIG TTL OUT Connector

A 5V TTL trigger signal is output for input to an external device.

3.17.3. TRIG SW IN Connector

This trigger is input during the READY or ENDLESS recording state by contact between the BNC connector's shield and a center pin (switch closure). The center pin normally has voltage flowing through it. Use caution to avoiding contact with other pins.

3.17.4. SYNC IN Connector

The system recognizes a TTL signal from other devices as a synchronization signal.
Input voltage is 0V to +12V (H level +2.5V to +12V), positive or negative polarity, pulse width is 200 ns or greater.

3.17.5. GENERAL IN Connector

The effect when a signal is input is described below, and can be optionally selected and set.
The input voltage is 0V to +12V (H level +2.5V to +12V), positive or negative polarity, pulse width is 200 ns or greater.

TRIG POS/NEG	Inputs a TTL trigger signal.
READY POS/NEG	Inputs a change recording ready status signal (READY ON/OFF).

Reference

- To make the setting from the menu, refer to “3.20.1. GENERAL IN Signal Settings”, page 59.
- To make the setting from PFV, refer to "Photron FASTCAM Viewer User’s Manual".

3.17.6. GENERAL OUT (1, 2, 3) Connector

These are also BNC connectors. The signals below can be changed and output from the menu or PFV.

(POS: positive polarity, NEG: negative)

SYNC POS/NEG	Outputs a vertical synchronization signal.
EXPOSE POS/NEG	Outputs the camera's exposure period signal. * Outputs during both LIVE and recording.
REC POS/NEG	Outputs a signal during recording.
TRIG POS/NEG	Outputs the trigger signal the camera received.
READY POS/NEG	Outputs a signal that indicates the recording ready state.

Reference

- For details refer to “3.20.2. GENERAL OUT Signal Settings”, page 60.

3.18. Using External Triggers

With the system, you can record by receiving various trigger signals matched to the recording application. The trigger signals that can be used on the system are explained here, along with a description of how to use them.

3.18.1. Inputting an External Trigger Signal

The external trigger signals that can be used with the system and their input system are listed below. External trigger signal input settings are also made by selecting [SYNC IN/OUT] from the menu and [TRIG TTL IN] or [GENERAL IN] from the submenu.
The signals input from the TRIG TTL IN and GENERAL IN connectors are explained in section "2.2.7. I/O Port Connector".

Connector Name (Input System)	Menu	Signal
TRIG TTL IN	TRIG POS	FET Input 0V - +12V (H level +2.5V to +12V), Positive Polarity
	TRIG NEG	FET Input 0V - +12V (H level +2.5V to +12V), Negative Polarity
GENERAL IN	TRIG POS	FET Input 0V - +12V (H level +2.5V to +12V), Positive Polarity
	TRIG NEG	FET Input 0V - +12V (H level +2.5V to +12V), Negative Polarity
TRIG SW IN	None	Contact signal

Set the signal type to be input to GENELAL IN from the menu in advance.

Use caution not to input more than specified voltage or current to the TRIG TTL IN and GENERAL IN trigger signal inputs as there is a risk of damage to the equipment.

Reference

- For the setting method of the signal inputted into GENERAL IN, refer to “3.20.1. GENERAL IN Signal Settings”, page 59.

◆ TRIG TTL IN , GENERAL TTL IN , TRIG SW IN , SYNC IN Circuit Diagram

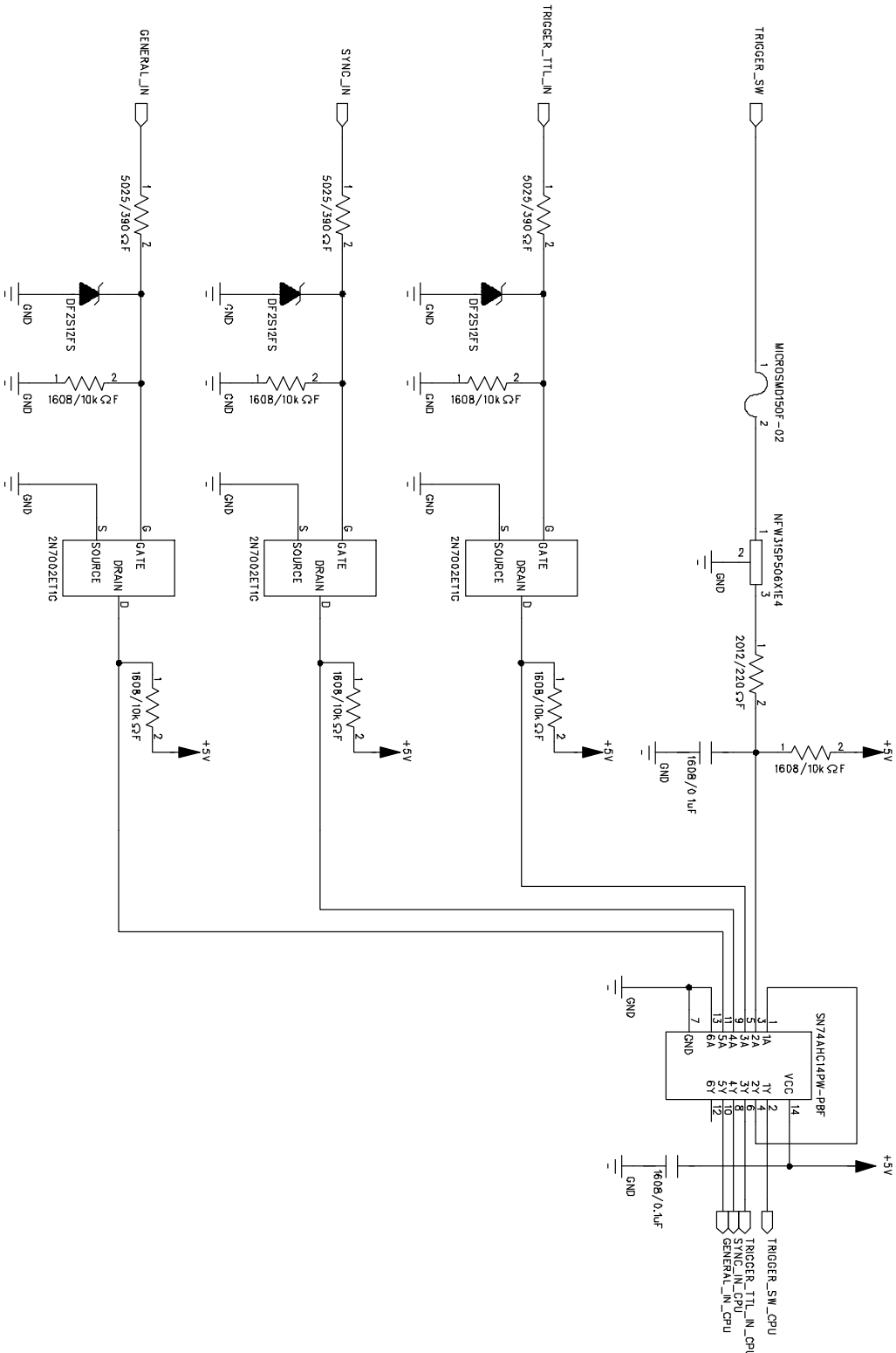

3.18.2. Outputting External Trigger Signals

With the system, you can externally output trigger signals. Output is performed with the TRIG TTL OUT connector's dedicated trigger output system provided by the system, and additionally, output can also be optionally set from the GENERAL OUT connector. External trigger signal output settings are also made by selecting [SYNC IN/OUT] from the menu and [TRIG TTL] OUT or [GENERAL OUT] from the submenu.
Signal output is performed from the TRIG TTL OUT connector and the GENERAL OUT connector explained in section “2.2.7. I/O Port Connector”.

The chart below summarizes the output systems and the signals that can be output.

Connector Name (Output System)	Menu Setting	Signal Type	Delay Time
TRIG TTL OUT	TRIG POS	TTL, SW, SOFT, all TRIG pulse output CMOS (74ACT541 buffer) output, Positive Polarity.	For TRIG SW IN, approx. 14.5 usec. For TRIG TTL IN, approx. POS: 95n sec. NEG:110n sec
	TRIG NEG	TTL, SW, SOFT, all TRIG pulse output CMOS (74ACT541 buffer) output, Negative Polarity.	
	TTL IN THRU POS	TRIG TTL IN through output CMOS (74ACT541 buffer) output, Positive Polarity.	For TRIG TTL IN POS, approx. 40nsec For TRIG TTL IN NEG, approx. 53nsec
	TTL IN THRU NEG	TRIG TTL IN through output CMOS (74ACT541 buffer) output, Negative Polarity.	
GENERAL OUT	TRIG POS	TTL, SW, SOFT, all TRIG pulse output CMOS (74ACT541 buffer) output, Positive Polarity.	For TRIG SW IN, approx. 14.5usec. For TRIG TTL IN GENERAL IN, approx. POS: 95n sec. NEG: 110n sec
	TRIG NEG	TTL, SW, SOFT, all TRIG pulse output CMOS (74ACT541 buffer) output, Negative Polarity	

3.19. Using External Synchronization Signals

An external synchronization mode to synchronize to an external signal is provided on the system. By using an external synchronization signal, recording can be conducted using multiple cameras to synchronize the timing of the shots or to also synchronize the shots with external measuring devices and lighting. The procedure and precautions for using the external synchronization signal are explained below.

3.19.1. Inputting an External Synchronization Signal

An external synchronization signal can be input with the system. See the chart below for external synchronization input settings.

Menu Display	Contents	Signal (Input Signal Conditions)
OFF	Sets external synchronization off, operates independently.	(none)
ON CAM POS	Synchronizes to a positive polarity signal from the system.	FET Input 0V - +12V (H level +2.5V to +12V), Positive Polarity
ON CAM NEG	Synchronizes to a negative polarity signal from the system.	FET Input 0V - +12V (H level +2.5V to +12V), Negative Polarity
ON OTHERS POS	Synchronizes to a positive polarity signal from an external device (including other Photron products).	FET Input 0V - +12V (H level +2.5V to +12V), Positive Polarity
ON OTHERS NEG	Synchronizes to a negative polarity signal from an external device (including other Photron products).	FET Input 0V - +12V (H level +2.5V to +12V), Negative Polarity

3.19.2. Outputting an External Synchronization Signal

The system can externally output a synchronization signal. Output of the external synchronization signal is performed from the GENERAL OUT connector explained in section “2.2.7. See the chart below for external synchronization output settings.

Menu Display	Contents	Signal Type	Delay Time
SYNC POS	Outputs a positive polarity vertical synchronization signal.	CMOS (74ACT541 buffer) output, positive polarity	Approx. 315nsec
SYNC NEG	Outputs a negative polarity vertical synchronization signal.	CMOS (74ACT541 buffer) output, negative polarity	Approx. 330nsec

3.19.3. Synchronization with a variable frequency

When synchronizing with a varying input frequency signal, the frame rate and resolution specified before recording will be kept as a maximum value, and the camera frequency can alternate to a minimum of about 60Hz(50Hz) following to the input signal, even under the recording mode.

Caution

- The camera runs as 48Hz when external sync signal is not inputted.

3.19.4. Synchronizing Multiple FASTCAM SA-X Systems (Multiple Unit Synchronized Recording)

The system can perform synchronized recording by synchronizing multiple units using external.

◆ Synchronization input/output

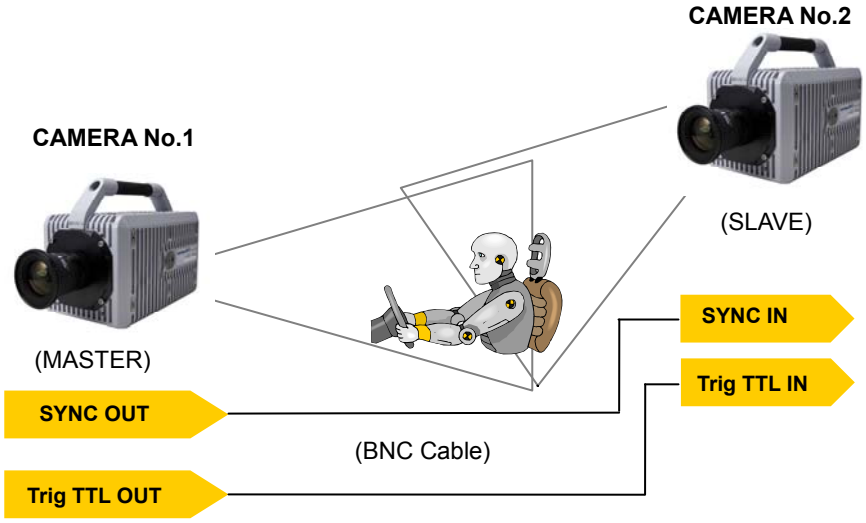

Synchronized recording settings using the system are made with the "remote controller (optional)" or PFV. The conceptual settings when performing synchronized recording using two systems are explained here. First, decide which camera to make the master camera (outputs the synchronization signal) and the slave camera (receives the synchronization signal) from the two systems to use for synchronized recording.

◆ Setting the Master Camera (Outputs Synchronization)

Set the signal output for the master camera which will output the synchronization signal. Synchronization signal settings are made with the "remote controller (optional)" or PFV.

■ For PFV (Standard)

1. Verify that the camera mode is in LIVE mode (the image displayed is passed through from the camera). If the system is in a mode other than LIVE mode, check "Live" on the camera control panel.
2. Select I/O on the left tree from "Camera Option" on the camera control panel.
3. Set "GENERAL OUT1".

■ For the Remote Controller (Optional)

1. Press the remote controller's MENU key and the menu list is displayed.
2. Select GENERAL OUT1 from the SYNC IN/OUT submenu with the remote controller's ARROW keys and press the ENTER key.
3. From the menu, select the signal to output from the master camera's GENERAL OUT1 connector. Move the cursor to the SYNC POS item with the ARROW keys and press the

ENTER key to select.

4. The master camera is set to output a positive polarity vertical synchronization signal from its GENERAL OUT1 connector.

◆ Setting the Slave Camera (Receives the Synchronization Signal)

Next, set the synchronization signal input for the slave camera which will receive the synchronization signal supplied by the master camera. Synchronization signal settings are made with the "remote controller (optional)" or PFV.

■ For PFV (Standard)

1. Verify that the camera mode is in LIVE mode (the image displayed is passed through from the camera). If the system is in a mode other than LIVE mode, check "Live" on the camera control panel.
2. Select I/O on the left tree from "Camera Option" on the camera control panel.
3. Set SYNC IN to "ON CAM POS".

■ For the Remote Controller (Optional)

1. Input the slave camera's synchronization. Connect the slave camera's SYNC IN connector with the master camera's GENERAL OUT1 connector using a BNC cable. When the synchronization signal is input to the SYNC IN connector, the SYNC IN LED (yellow) on the rear of the slave camera illuminates.
2. Set the synchronization signal type that slave camera will receive. Press the remote controller's MENU key and the menu list is displayed.
3. Select SYNC IN from the SYNC IN/OUT submenu with the remote controller's ARROW keys and press the ENTER key.
4. The output previously set on the master camera has positive polarity (POSITIVE), therefore it is necessary to make the setting on the slave camera controller the same, positive polarity (POSITIVE). Move the cursor to the ON CAM POS item with the ARROW keys and press the ENTER key to select.

Important

- If steps, 2 to 3 are completed when no synchronization signal is being input, the camera will not operate normally. As detailed in the procedure, make the settings when the signal is being input.
- It is necessary to connect a "Trigger signal" separate from a "Synchronized signal".
- Please connect a "Trig TTL OUT" on a master camera and "Trig TTL IN" on any slave cameras,if you need to operate multiple camera system with a Trigger signal on a master camera.

3.19.5. Synchronizing the System with Other External Devices (Frame Rate Synchronized Recording)

With the system, in addition to the frame rate preset in the system, a function has been provided where you can receive a synchronization signal externally, set the frame rate with that frequency, and record.
In this way, for example, the system can be synchronized with a dynamic body that spins at 1,350 revolutions a second to conduct high-speed recording at 1,350 fps. This can open up broad applications that were unavailable until now.

◆ Conceptual Diagram of External Synchronized Recording

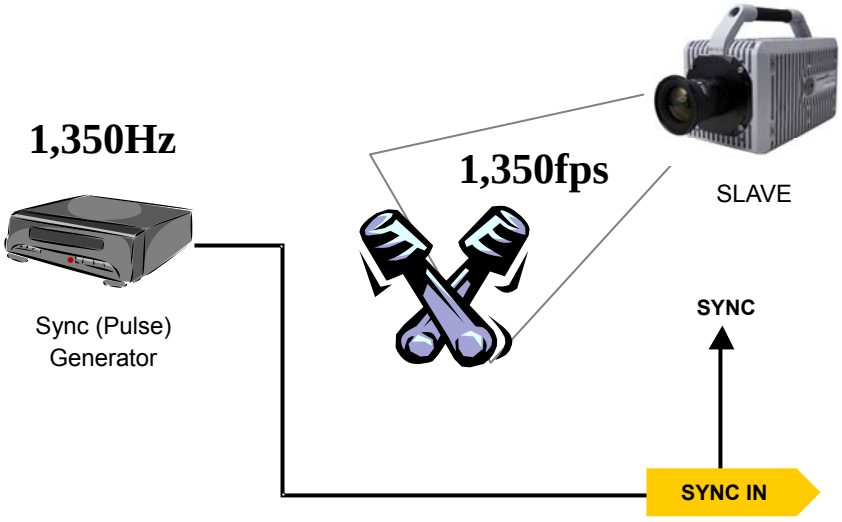

This function using an external synchronization signal to synchronize the camera to the desired frame rate is explained here.

Important

- When conducting frame rate synchronization recording with the system, the input signal must meet the following conditions.
  - ■ FET Input 0V - +12V (H level +2.5V to +12V), positive polarity or negative polarity
  - ■ 60 Hz (50 Hz for PAL) to 900,000 Hz

System Settings

Frame rate synchronization signal settings on the system are made with the "remote controller (optional)" or PFV.

For PFV (Standard)

1. Verify that the camera mode is in LIVE mode (the image displayed is passed through from the camera). If the system is in a mode other than LIVE mode, check "Live" on the camera control panel.
2. Select I/O on the left tree from "Camera Option" on the camera control panel.
3. Set SYNC IN to "ON OTHERS POS/NEG".

For the Remote Controller (Optional)

1. Input the synchronization signal from the device that generates the signal to the system. Connect the synchronizing device’s output signal to the system’s SYNC IN connector using a BNC cable.
2. When the synchronization signal is input to the SYNC IN connector, the SYNC IN LED (yellow) on the rear of the system illuminates. (* If the synchronization signal is lost, the LED goes out.)
3. Press the remote controller's MENU key and the menu list is displayed.
4. Select SYNC IN from the SYNC IN/OUT submenu with the remote controller's ARROW keys and press the ENTER key.
5. Use the remote controller's ARROW keys to select the input signal. Select ON OTHERS POS (positive polarity) or ON OTHERS NEG (negative polarity) according to the polarity of the external synchronization signal.
6. When the setting is complete, press the ENTER key to finish.
7. Output the signal from the synchronization device and verify that the system recognizes the output frequency and synchronizes its frame rate. The recognized frame rate will display in the lower left of the video monitor.

Caution

- If no synchronization signal is input or the input signal is under 60Hz (50Hz) during steps 3 to 7, or the synchronization signal is lost, the display shows "NO SYNC INPUT".
  If steps 3 through 7 are done inputting a signal over 900,000Hz , the display shows “OVER SYNC INPUT”.
  In either case, you cannot record normally.

- A minute error occurs in the input synchronization signal due to the construction of the internal circuitry of this function.
  An error of ±18.5 ns occurs for the input synchronization signal in the actual operation.
  Since the frame rate display value on the monitor is in 1Hz units, the error may be shown larger than the actual operation (an error of about ±1-5Hz is produced).
  For example, when performing external device synchronization inputting a synchronization signal of 10000Hz, the monitor display error is:
  10,000 Hz ±1Hz = 9,999 fps to 10,001 fps.

3.19.6. Synchronizing the System with Other Cameras (Mixed Device Synchronized Recording)

Using the function (frame rate synchronization recording) in the previous section, "3.19.5. Synchronizing the System with Other External Devices (Frame Rate Synchronized Recording)", mixed-type synchronized recording can be performed with Photron's other high-speed cameras (except for some older products).
In particular, the FASTCAM SA series, FASTCAM APX-RS and FASTCAM MC2, FASTCAM MC2.1, FASTCAM MH4-10K are compatible with collective control by the PFV control software.

◆ Basic Process

1. Decide the master camera (the source of the synchronization signal) and the slave camera (the camera that will operate according to the synchronization signal from the master). Basically, by making the master camera the camera with the lowest maximum frame rate that can be set, you can avoid setting a synchronization signal speed the slave camera cannot receive.
2. Connect the master camera's Sync output connector to the slave camera's V-SYNC input connector with a BNC cable, select the synchronization signal output polarity on the master camera, and then set the slave camera to be operated by that signal.

Reference

- For camera models that can perform synchronized recording or for detailed instructions on making the settings, contact Photron at the contact information in "7.1. Contact Information".

3.20. GENERAL Signal Settings

3.20.1. GENERAL IN Signal Settings

Details of the signals output from the GENERAL OUT connector explained in section “3.17. Contact Information” are shown in the chart below.

Menu Display	Contents	Signal (Input Signal Conditions)
TRIG POS	Inputs a positive polarity trigger signal.	FET Input 0V - +12V (H level +2.5V to +12V), Positive Polarity
TRIG NEG	Inputs a negative polarity trigger signal.	FET Input 0V - +12V (H level +2.5V to +12V), Negative Polarity
READY POS	Inputs a positive polarity READY signal. READY ON/OFF is switched by a pulse input.	FET Input 0V - +12V (H level +2.5V to +12V), Positive Polarity
		FET Input 0V - +12V (H level +2.5V to +12V, Negative Polarity
READY NEG	Inputs a negative polarity READY signal. READY ON/OFF is switched by a pulse input.	FET Input 0V - +12V (H level +2.5V to +12V), Positive Polarity
		FET Input 0V - +12V (H level +2.5V to +12V), Negative Polarity

When using the camera as a part of a system, verify the characteristics of the input signals before using them.

3.20.2. GENERAL OUT Signal Settings

Details of the signals output from the GENERAL OUT connector explained in section “3.17. Contact Information” are shown in the chart below. There are three GENERAL OUT connectors and individual settings can be made for each connector.

Menu Display	Contents	Signal Type
SYNC POS	Outputs a positive polarity vertical synchronization signal.	+5V CMOS output, Positive Polarity
SYNC NEG	Outputs a negative polarity vertical synchronization signal.	+5V CMOS output, Negative Polarity
EXPOSE POS	Outputs the sensor's exposure interval at H level.	+5V CMOS output, Positive Polarity
EXPOSE NEG	Outputs the sensor's exposure interval at L level.	+5V CMOS output, Negative Polarity
REC POS	Outputs an interval signal during recording at H level.	+5V CMOS output, Positive Polarity
REC NEG	Outputs an interval signal during recording at L level.	+5V CMOS output Negative Polarity
TRIG POS	Outputs the trigger signal received by the camera at H level.	+5V CMOS output, Positive Polarity
TRIG NEG	Outputs the trigger signal received by the camera at L level.	+5V CMOS output, Negative Polarity
READY POS	Outputs a signal at H level during the trigger wait state. (READY in START mode.) Only valid during START, CENTER, END, and MANUAL modes.	+5V CMOS output, Positive Polarity
READY NEG	Outputs a signal at L level during the trigger wait state. (ENDLESS recording state in CENTER, END, MANUAL) Only valid during START, CENTER, END, and MANUAL modes.	+5V CMOS output, Negative Polarity
IRIG RESET POS	Outputs the camera's internal IRIG reset signal (1PPS) at H level.	+5V CMOS output, Positive Polarity
IRIG RESET NEG	Outputs the camera's internal IRIG reset signal (1PPS) at H level.	+5V CMOS output, Negative Polarity

When using as a part of a system, verify the characteristics of the output signals before using them.

3.21. Signal Delay

With the system, you can set the signal delay time or pulse width for the various signals that are input and output. Pulse width and delay settings for the various signals to input/output are made with PFV or the remote controller (optional). The content of each setting is listed in the chart below.

Setting Item	Setting Range (Value)
TRIG TTL IN DELAY	0-60 (s) 100 ns units
SYNC IN DELAY	0-1/frame rate (s) 100 ns units
GENERAL IN DELAY	0-60 (s) 100 ns units
TRIG OUT WIDTH	0-1 (ms) 100 ns units
SYNC OUT DELAY	0-1/frame rate (s) 100 ns units
SYNC OUT WIDTH	0-500 (us), 1/frame rate (s) at 2,000 fps or higher 100 ns units
EXPOSE OUT DELAY	0-1/frame rate (s) 100 ns units
SYNC OUT TIMES	0.5, 1, 2, 4, 6, 8, 10, 20, 30 (* x1 is standard output)

◆ SYNC OUT TIMES

Values 1, 2, 4, 6, 8, 10. A value of 1 is normal output.
Set from the SYNC IN/OUT menu, SYNC OUT TIMES submenu.
Output a SYNC (vertical synchronization signal) from SYNC OUT that is 30 times SYNC.

Example: For a frame rate of 1,000 fps, SYNC OUT TIMES setting of 2.

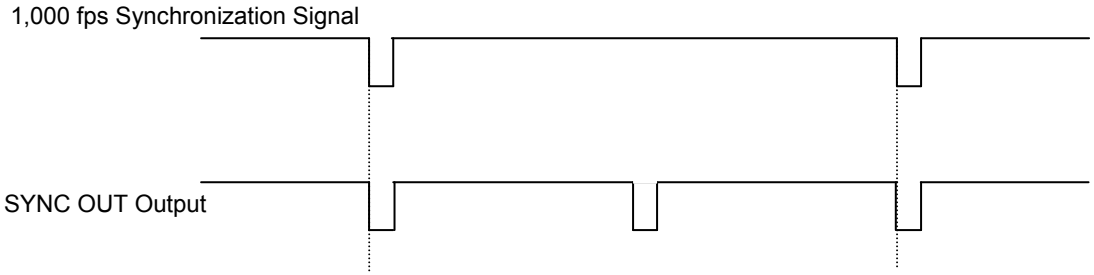

Example: For a frame rate of 1,000 fps, SYNC OUT TIMES setting of 4.

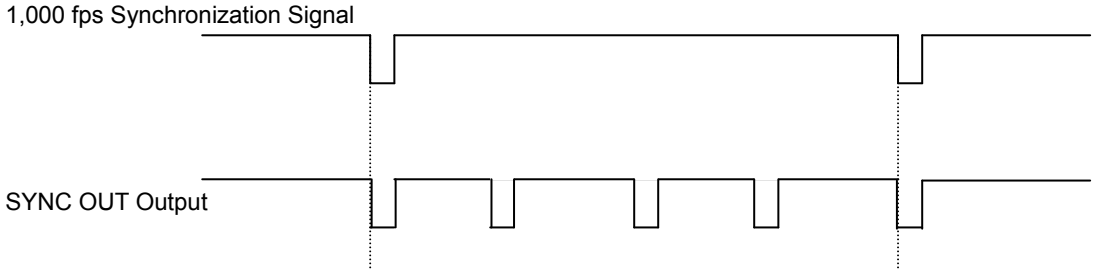

Caution

- An accurate frequency is output, but when SYNC OUT TIMES is set to a large value with a high frame rate, the setting may result in frequency errors.

Caution

- There are following limitations in SYNC OUT TIMES function

Frame Rate			Restriction
	～	60,000fps	No Limit
60,001fps	～	90,000fps	x30 is unavailable
90,001fps	～	480,000fps	x20 and x30 are unavailable
500,001fps	～	700,000fps	x8 ,10 ,20 ,30 are unavailable
700,001fps	～	900,000fps	x6 ,8 ,10 ,20 ,30 are unavailable

3.22. Event Marker Function

With the system, it is possible to input an external signal during recording, at the instant the frame number is stored, and during playback you can immediately access, or jump to, the stored frame numbers (event markers). This a separate feature from the trigger point, by marking interesting points during recording, these points can be easily called up for review during playback. The event marker can store ten positions within a sequence.
The frame number recording occurs on the pulse's edge, and the next frame after the pulse's edge is input is stored as the event marker. Event marker settings can be made with the "Remote controller (optional)" or PFV.

3.23. Using Programmable Switch (USER SW)

There are four switches that can be set on the back of the system. Settings for the switches are made from the menu and they can each be assigned a different function. The content of each setting is listed in the chart below.
As an example, setting the USER1 switch on the back of the camera body is explained here.

◆ PFV

Setting	Explanation
OFF	Does not assign a function.
Change Frame Rate	Raises the frame rate
Change Resolution	Lowers the resolution
Change Shutter Speed	Increases the shutter speed.
Change Trigger Mode	Changes the trigger mode.
Fitting image	Adjusts the size of the image displayed on the video output to be the maximum for the current resolution.
Status Display	Displays the status of camera settings on the video output.
Switch LIVE/MEMORY	Switches between LIVE and MEMORY states.
Record Ready	Sets the record ready state.
Record	Starts recording.
Low-Light	Turns low-light mode ON/OFF.
Shading	Performs black level calibration. Press this button once and the LEDs on the back of the camera illuminate back and forth from left to right and from right to left to inform you of the ready state. Afterwards, with the sensor shielded, press the button once more to complete calibration.

◆ Remote Controller (Optional)

Setting	Explanation
OFF	Does not assign a function.
FRAMERATE SEL	Raises the frame rate.
RESOLUTION SEL	Lowers the resolution
SHUTTER SEL	Increases the shutter speed.
TRIGGER SEL	Changes the trigger mode
FIT	The same function as the [FIT] key on the keypad.
STATUS	The same function as the [STATUS] key on the keypad.
LIVE	The same function as the [LIVE] key on the keypad.
REC READY	The same function as the [REC READY] key on the keypad.
REC	The same function as the [REC] key on the keypad.
LOW LIGHT	The same function as the [LOW LIGHT] key on the keypad.
CALIBRATE	The same function as the [CALIBRATE] key on the keypad.

3.24. IRIG Time Code (External Time Synchronization)

The system supports IRIG-B input and can add an IRIG code to each recorded frame. The sample timing for the IRIG code is once each frame.
The recorded IRIG code is displayed on the VIDEO display or with the “Photron FASTCAM VIEWER” software.

◆ IRIG Code Input Specification

Connector	BNC
Code Format	IRIG-B (122) Analog
Amplitude	1.0Vp-p min,8.0Vp-p max
Mark to space ratio	3:1 to 6:1
Typical modulated carrier signal ratio	10:1

Supplement

- IRIG Time Code is used when synchronizing a camera with external equipment in time.
  It is a convenient function when apparatus is physically separated.
- When the IRIG code is being input, the IRIG code is displayed in white, and is displayed to the left.
- The IRIG offset time is also displayed below it. When the IRIG code is not being input, the IRIG code is displayed in grey. At that time, the counter is the camera’s internal counter and it continues to count.

Caution

- **Limitation of use of IRIG code**
  With the Image Trigger function, IRIG code cannot be used when the specified number of frames is 32 or fewer in RANDOM CENTER or RANDOM MANUAL trigger mode.

3.25. IRIG-sync Operation

This camera system supports IRIG-sync operation, in which the sensor drive signal is synchronized with the input of IRIG-B signal.

◆ How IRIG-sync operation works?

In IRIG-sync operation, the image sensor is driven by the timing signal shown below. Exposure to the sensor ends at the start of the IRIG-1PPS signal

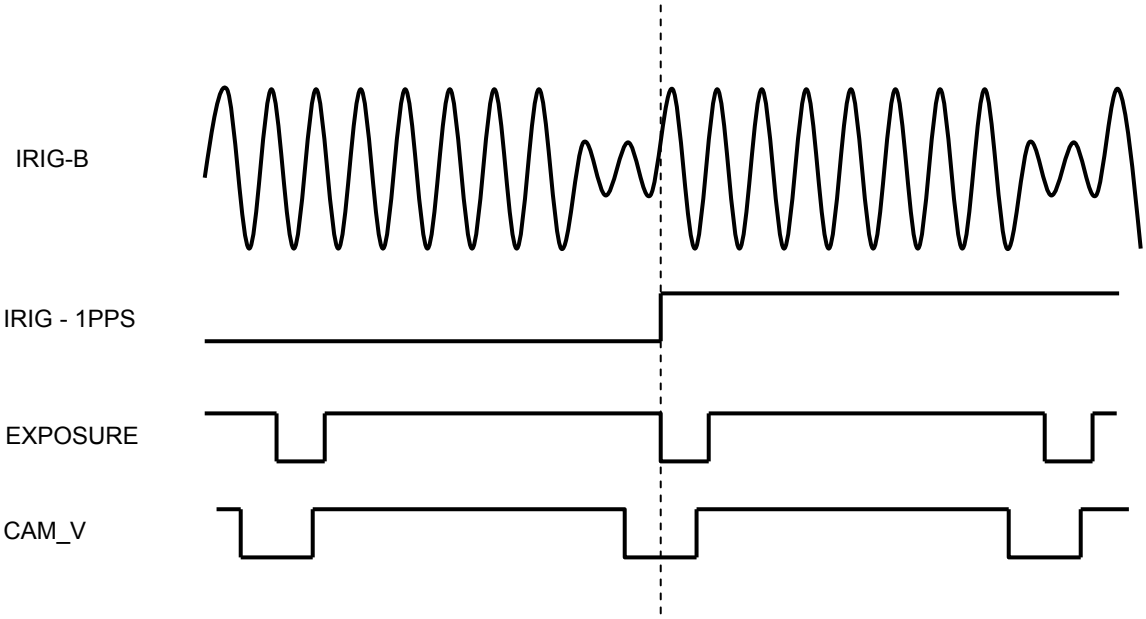

IRIG-B : IRIG code that is input to the camera
IEIG-1PPS : 1PPS timing of the IRIG code
EXPOSURE : Exposure to the camera sensor (exposure is indicated by high duration)
CAM_V : Camera's vertical sync signal

Reference

- For the settig about the function, refer to the "Photron FASTCAM Viewer User's Manual" or the "Remote Controller User's Manual".

3.26. 8bit Recording Mode

Since the image sensor of 12 bits specification is being used for this product, it is usually recorded at 12 bits. By using 8 bits Recording Mode Mode, it is possible to record by 8 bits.

When data is recorded in the 8-bit mode, the amount of data is smaller than in 12-bit mode. Therefore, it is possible to record for a longer amount of time.

8bit Recording Mode setting can be made with the “Remote controller (optional)" or PFV.

Reference

- For the details of a 8 bit Recording Mode setup, refer to「5.1.10.Recordable Image Count/Resolution (8bit)」,Page 88

3.27. Direct Trigger / Direct Start Mode

The system recording operation responding to an input trigger signal can be configured according to varies of customer's needs.

- DIRECT TRIGGER Mode (This mode is NOT supported on PFV software)
  - START TRIGGER Mode
    Recording starts immediately upon the second trigger input.
  - CENTER, END, MANUAL TRIGGER Mode
    Once the trigger signal is input, the camera will be shifted to endless recording state.
- DIRECT START Mode
  - START TRIGGER Mode
    The same operation as when the direct trigger mode is off.
  - CENTER, END, and MANUAL TRIGGER Modes
    Once the trigger signal is input, the camera is shifted to endless recording state. In this circumstance, either the "RECORD" button of PFV software or the GENERAL IN Connector under ReadyPos state, furthermore the "RECORD" button of LCD Remote Controller can trigger a record signal to the camera.

Reference

- For details of how to set the camera to DIRECT START Mode, refer to "Remote Controller User's Manual" or "Photron FASTCAM Viewer User's Manual".
- For details of GENERL IN signal settings, refer to "3.20.1. GENERAL IN Signal Settings".

MEMO

Chapter. 4 Connecting a PC

4.1. Connecting the Gigabit Ethernet Interface to a PC

4.1. Connecting the Gigabit Ethernet Interface to a PC

The system can have the operation of its functions performed from a PC using the Gigabit Ethernet interface.This section explains the required setup when connecting the system to a PC.

To connect a PC to the system, connect the system to a commercially available 1000BASE-T-compatible interface board with a LAN cable. For the LAN cable, prepare a UTP or STP Cat 5e (enhanced category 5) or higher LAN cable. (UTP: Unshielded Twisted Pair, STP: Shielded Twisted Pair)
The maximum cable length between the PC and the system is 100 m (compliant to the 1000BASE-T specification).. One PC can connect to a maximum of 64 Photron Gigabit Ethernet interface equipped cameras using a hub. When connecting multiple devices, connect through a switching hub that can connect at 1000BASE-T. The maximum length of the cable that connects the system (or PC) to the switching hub is also 100 m.

The system has two sets of Gigabit Ethernet interface connectors incorporated. Using these two connectors simultaneously will make much faster download of image data possible.

Reference

- For the setting method of IP address for camera system, refer to “4.1.2. Setting the IP Address”, page 71.
- For the setting method of control PC, refer to “Photron FASTCAM Viewer User's Manual”.
- Please refer to the [GigabitEthernet Interface Connection Tutorial Manual」for detail instruction on PC connection setting.
- About the high-speed download feature using two cables, please see the explanation in “4.1.5. High-speed Download Feature” given in page 72.

Supplement

- Photron recommends using an STP cable over long distances or in noisy locations.

Important

- The system is only 1000BASE-T compatible. When using a PC compatible with only 10BASE-T or 100BASE-TX, the PC must be connected through a 10BASE-T, 100BASE-TX, and 1000BASE-T compatible switching hub.
- The system's factory default IP address is below:

IP ADDRESS >	GIGABIT ETHER1	192.168.0.10
	GIGABIT ETHER2	192.168.1.10
NETMASK >	GIGABIT ETHER 1	255.255.255.0
	GIGABIT ETHER 2	255.255.255.0

GATEWAY ADDRESS > 0.0.0.0
PORT > 2000 (Fixed, not changeable)

4.1.1. Connecting the System and a PC

Connect the LAN cable to the system as shown below.

Insert the LAN cable into the "GIGABIT ETHER1" or “GIGABIT ETHER2” connector.

Caution

- It is NOT supported to connect and operate one camera synchronously using two PCs via the “GIGABIT ETHER1” connector and ”GIGABIT ETHER2” connector respectively.

4.1.2. Setting the IP Address

The IP address can be specified using a remote controller (option) or using the PFV software.

Caution

- When connecting the system to a PC or when connecting other Gigabit Ethernet interface compatible Photron cameras, set each of those devices to a different IP address. Also, when connecting the system to an existing network, do not use IP addresses that are already in use on the network.

Reference

- For the procedure for setting the IP address of the system, refer to the "Photron FASTCAM Viewer User's Manual" or the "Remote Controller User's Manual".

4.1.3. Using DHCP (Dynamic Host Configuration Protocol)

The system is compatible with DHCP. In an environment where DHCP is used, the system's IP address can be acquired from the DHCP server.

Reference

- For details, refer to the "Photron FASTCAM Viewer User's Manual".

4.1.4. Connecting Multiple Systems and a PC

With PFV, the system's control software, one PC can connect to and control multiple FASTCAM series camera systems.

Caution

- When connecting to multiple systems, set the IP address of each one to a unique setting.

4.1.5. High-speed Download Feature

The system has two sets of Gigabit Ethernet interface connectors incorporated. Using these two connectors simultaneously will make much faster download of image data possible.

1. Conduct settings for connecting both Gigabit Ethernet 1 and Gigabit Ethernet 2 on the PC being used.
2. On the PFV, make connection settings for one of the two connectors.
3. Connect between the PC and both connectors with LAN cables.
4. The PFV recognizes the two connectors as one single camera.
   Download is made through the two LAN cables in high-speed download setting.

Reference

- For connection to the PC, please refer to the explanation given in “GigabitEthernet Interface Connection Manual”

Caution

- When connecting, please be careful not to duplicate the IP address of Gigabit Ethernet connectors.
- Depending on the capability of the PC being used, there may be a chance that the effect of High-Speed Download function is only marginal.

4.1.6. Simultaneous Replay/Record Function

With this system, the data recording memory may be divided into two active sections, which allows the user to record an ongoing event into one of the sections while replaying the image recorded in the other section.

Reference

- For information on the operation of the function, please refer to “Photron FASTCAM Viewer Users’ Manual”.

4.1.7. Gigabit Ethernet Interface Initialization

When you cannot communicate well with the camera even though you are running PFV, the system's control software, you may be able to improve the situation by performing the procedure below.

1. Of the four USER SW (programmable switches) on the back of the camera body, press and hold USER1 and USER4 for **10 seconds** or more.
2. The LEDs on the rear of the camera body will illuminate back and forth from left to right and from right to left and inform you that the initialization of the Gigabit Ethernet interface has completed normally.

Caution

- Pressing and holding on the USER SW (Programmable Switch) for more than 15 seconds will result in an IP Address Initialization.

4.1.8. Camera IP Address Initialization

In some circumstance when the IP address is changed, and the new IP address is not explicit, an IP Address Initialization operation is recommended. In this case, the IP address will be reset to 192.168.0.10 as the factory settings.

1. Of the four USER SW (programmable switches) on the back of the camera body, press and hold USER1 and USER4 for **15 seconds** or more.

2. When the LEDs blink from left to right and then from right to left alternately, it indicates the initialization operation is accomplished.

MEMO

Chapter. 5 **Product Specifications**

5.1. Specifications

5.2. Dimentions

5.1. Specifications

5.1.1. Product Specifications

Image Sensor	CMOS image sensor	
Sensor Resolution	1,024 x 1,024 pixels	
Frame Rate	When full frame: 12,500fps max. When a frame segment: 900,000 fps max.	
Lens Mount	G type F mount, C mount, F mount (optional), Lens Mount with Filter Changer (optional)	
Recording Color Depth	Monochrome	12bit / 8bit
	Color	RGB, each 12bit / 8bit(Bayer color filter method)
Shutter Method	Electronic shutter	
Recording Method	IC memory	
Recording Memory Capacity	8 GB (type 1), 16 GB (type 2), 32 GB (type 3) , 64 GB (type 4)	
Trigger Method	START, CENTER, END, MANUAL, RANDOM RANDOM RESET, RANDOM CENTER, RANDOM MANUAL	
Gain Control	Hardware LUT on camera Controllable via Remote Controller or software	
Image Output Customization	Customizable LUT, brightness is changeable	
External Synchronization Input Signal	+3.3 to +12Vp-p, negative polarity/positive polarity (switchable)	
External Synchronization Output Signal	5 Vp-p, negative polarity/positive polarity (switchable)	
Trigger Input Signal	TTL(+3.3 to +12V), contact	
Other Output Signals	Other timing signal outputs	
External Control	Remote Controller, RS-422 external control I/F, Gigabit Ethernet I/F (PC)	
Video Output Signal	NTSC/PAL, HD SDI (Compliant with SMPTE 292M) -(NTSC mode) 1080i / 60Hz , 59.94Hz 1080p / 30Hz , 29.97Hz , 24Hz , 23.98Hz , 24Hz(sF) , 23.98Hz(sF) -(PAL mode) 1080i / 50Hz 1080p / 25Hz , 24Hz , 23.98Hz , 24Hz(sF) , 23.98Hz(sF) With digital zoom, scroll, fit functions	
Digital Interface	Gigabit Ether x2 Port(1000BASE-T) , SD memory card slot	

5.1.2. General Specifications

Environment Conditions		
Storage Temperature		-20℃ ~ 60℃ (No Condensation) -4ºF ~ 140ºF (No Condensation)
Storage Humidity		85% or less (No Condensation)
Operating Temperature		0 ~ 40℃ (No Condensation) 32ºF ~ 104ºF (No Condensation)
Operating Humidity		85% or less (No Condensation)
External Dimensions		
Camera Body	SA-X2	177.7 (H) x 160 (W) x 350 (D) mm, excluding protrusion 7.0" (W) x 6.3" (H) x 13.7" (D)
	SA-X2 RV	230.3 (H) x 160 (W) x 350 (D) mm, excluding protrusion 9.0" (W) x 6.3" (H) x 13.7" (D)
AC Adapter		47 (H) x 108 (W) x 214 (D) mm, excluding protrusion 1.85” (W) x 4.25” (H) x 8.42” (D)
AC Power Supply		
Supply Voltage		100V ～ 240V (type A cable: up to 125V)
Supply Frequency		50Hz ～ 60Hz
Power Consumption		210W
DC Power Supply		
Power Voltage		18V ～ 36 V
Power Consumption		210VA
Weight		
Camera Body	SA-X2	9.9 kg 21.82 lbs
	SA-X2 RV	13.7 kg 30.20 lbs
AC Adapter		1.2 kg 42.33 oz.

Photron has verified two types of AC cables, type A (standard for Japan, USA, Canada, etc.) and type SE (standard for Germany, France, etc.). However, when those cables cannot properly receive power when plugged in, use the proper AC cable for the region's standards and verify that AC cable works properly.

For inquires regarding the recommended AC cable for each region, contact that region's Photron branch office or the distributor.

5.1.3. Options

User Option
Remote Keypad
LCD Remote Keypad
Lens Mount with Filter Changer
4 Output Trigger Box
Dedicated Carrying Case
Spare Power Supply Connector (for custom cable construction)
LAN Connector Anti-Dust Shell
F Mount Adapter without G type lens aperture adjuster

MEMO

5.1.4. Frame Rate and Resolution

13.5K Mode ON(1,024 x 1,024～640 x 256)

Image size / Frame rate (fps)	1,024 × 1,024	1,024 × 1,000	1,024 × 896	1,024 × 672	1,024 × 512	896 × 896	896 × 496	896 × 368	768 × 768	768 × 512	768 x 328	768 × 272	640 × 512	640 × 256
50 (PAL)	○	○	○	○	○	○	○	○	○	○	○	○	○	○
60	○	○	○	○	○	○	○	○	○	○	○	○	○	○
125	○	○	○	○	○	○	○	○	○	○	○	○	○	○
250	○	○	○	○	○	○	○	○	○	○	○	○	○	○
500	○	○	○	○	○	○	○	○	○	○	○	○	○	○
1,000	○	○	○	○	○	○	○	○	○	○	○	○	○	○
2,000	○	○	○	○	○	○	○	○	○	○	○	○	○	○
3,000	○	○	○	○	○	○	○	○	○	○	○	○	○	○
4,000	○	○	○	○	○	○	○	○	○	○	○	○	○	○
5,000	○	○	○	○	○	○	○	○	○	○	○	○	○	○
6,000	○	○	○	○	○	○	○	○	○	○	○	○	○	○
7,200	○	○	○	○	○	○	○	○	○	○	○	○	○	○
8,000	○	○	○	○	○	○	○	○	○	○	○	○	○	○
9,000	○	○	○	○	○	○	○	○	○	○	○	○	○	○
10,000	○	○	○	○	○	○	○	○	○	○	○	○	○	○
12,000	○	○	○	○	○	○	○	○	○	○	○	○	○	○
12,500	○	○	○	○	○	○	○	○	○	○	○	○	○	○
13,500		○	○	○	○	○	○	○	○	○	○	○	○	○
20,000				○	○		○	○	○	○	○	○	○	○
30,000							○	○		○	○	○	○	○
40,000								○			○	○		○
50,000											○	○		○
60,000												○		○
72,000														○
81,000														
100,000														
200,000														
300,000														
480,000														
540,000														
675,000														
900,000														

The circle indicates a possible setting. The green items are the maximum resolution setting at that frame rate. This table is the list of default settings. Even finer settings are possible with the variable setting.

(512 x 512～128 x 8)

Image size / Frame rate (fps)	512 × 1512	512 × 1272	512 × 1256	384 × 8264	256 × 5256	256 × 5152	256 × 5128	256 × 580	128 × 2128	128 × 248	128 × 240	128 × 216	128 × 28
50 (PAL)	○	○	○	○	○	○	○	○	○	○	○	○	○
60	○	○	○	○	○	○	○	○	○	○	○	○	○
125	○	○	○	○	○	○	○	○	○	○	○	○	○
250	○	○	○	○	○	○	○	○	○	○	○	○	○
500	○	○	○	○	○	○	○	○	○	○	○	○	○
1,000	○	○	○	○	○	○	○	○	○	○	○	○	○
2,000	○	○	○	○	○	○	○	○	○	○	○	○	○
3,000	○	○	○	○	○	○	○	○	○	○	○	○	○
4,000	○	○	○	○	○	○	○	○	○	○	○	○	○
5,000	○	○	○	○	○	○	○	○	○	○	○	○	○
6,000	○	○	○	○	○	○	○	○	○	○	○	○	○
7,200	○	○	○	○	○	○	○	○	○	○	○	○	○
8,000	○	○	○	○	○	○	○	○	○	○	○	○	○
9,000	○	○	○	○	○	○	○	○	○	○	○	○	○
10,000	○	○	○	○	○	○	○	○	○	○	○	○	○
12,000	○	○	○	○	○	○	○	○	○	○	○	○	○
12,500	○	○	○	○	○	○	○	○	○	○	○	○	○
13,500	○	○	○	○	○	○	○	○	○	○	○	○	○
20,000	○	○	○	○	○	○	○	○	○	○	○	○	○
30,000	○	○	○	○	○	○	○	○	○	○	○	○	○
40,000	○	○	○	○	○	○	○	○	○	○	○	○	○
50,000		○	○	○	○	○	○	○	○	○	○	○	○
60,000		○	○	○	○	○	○	○	○	○	○	○	○
72,000		○	○	○	○	○	○	○	○	○	○	○	○
81,000		○	○	○	○	○	○	○	○	○	○	○	○
100,000				○	○	○	○	○	○	○	○	○	○
200,000						○	○	○	○	○	○	○	○
300,000								○		○	○	○	○
480,000										○	○	○	○
540,000											○	○	○
675,000												○	○
900,000													○

The circle indicates a possible setting.The green items are the maximum resolution setting at that frame rate.
This table is the list of default settings. Even finer settings are possible with the variable setting.

13.5K Mode OFF(1,024 x 1,024～512 x 256)

Image size / Frame Rate (fps)	1,024 × 1,024	1,024 × 1,000	1,024 × 888	1,024 × 704	1,024 × 512	896 × 768	768 × 768	768 × 624	640 × 640	640 × 512	512 × 512	512 × 376	512 × 284	512 × 256
50 (PAL)	○	○	○	○	○	○	○	○	○	○	○	○	○	○
60	○	○	○	○	○	○	○	○	○	○	○	○	○	○
125	○	○	○	○	○	○	○	○	○	○	○	○	○	○
250	○	○	○	○	○	○	○	○	○	○	○	○	○	○
500	○	○	○	○	○	○	○	○	○	○	○	○	○	○
1,000	○	○	○	○	○	○	○	○	○	○	○	○	○	○
2,000	○	○	○	○	○	○	○	○	○	○	○	○	○	○
3,000	○	○	○	○	○	○	○	○	○	○	○	○	○	○
4,000	○	○	○	○	○	○	○	○	○	○	○	○	○	○
5,000	○	○	○	○	○	○	○	○	○	○	○	○	○	○
6,000	○	○	○	○	○	○	○	○	○	○	○	○	○	○
7,200	○	○	○	○	○	○	○	○	○	○	○	○	○	○
8,000	○	○	○	○	○	○	○	○	○	○	○	○	○	○
9,000	○	○	○	○	○	○	○	○	○	○	○	○	○	○
10,000	○	○	○	○	○	○	○	○	○	○	○	○	○	○
12,000			○	○	○	○	○	○	○	○	○	○	○	○
15,000				○	○	○	○	○	○	○	○	○	○	○
20,000					○			○	○	○	○	○	○	○
30,000											○	○	○	○
40,000												○	○	○
50,000													○	○
60,000														
72,000														
80,000														
90,000														
100,000														
120,000														
200,000														
259,200														
270,000														
324,000														

The circle indicates a possible setting.The green items are the maximum resolution setting at that frame rate.
This table is the list of default settings. Even finer settings are possible with the variable setting.

(384 x 272～128 x 8)

Image size / Frame Rate (fps)	384 × 272	256 × 256	256 × 224	256 × 192	256 × 168	256 × 128	256 × 56	128 × 128	128 × 64	128 × 32	128 × 16	128 × 8
50 (PAL)	○	○	○	○	○	○	○	○	○	○	○	○
60	○	○	○	○	○	○	○	○	○	○	○	○
125	○	○	○	○	○	○	○	○	○	○	○	○
250	○	○	○	○	○	○	○	○	○	○	○	○
500	○	○	○	○	○	○	○	○	○	○	○	○
1,000	○	○	○	○	○	○	○	○	○	○	○	○
2,000	○	○	○	○	○	○	○	○	○	○	○	○
3,000	○	○	○	○	○	○	○	○	○	○	○	○
4,000	○	○	○	○	○	○	○	○	○	○	○	○
5,000	○	○	○	○	○	○	○	○	○	○	○	○
6,000	○	○	○	○	○	○	○	○	○	○	○	○
7,200	○	○	○	○	○	○	○	○	○	○	○	○
8,000	○	○	○	○	○	○	○	○	○	○	○	○
9,000	○	○	○	○	○	○	○	○	○	○	○	○
10,000	○	○	○	○	○	○	○	○	○	○	○	○
12,000	○	○	○	○	○	○	○	○	○	○	○	○
15,000	○	○	○	○	○	○	○	○	○	○	○	○
20,000	○	○	○	○	○	○	○	○	○	○	○	○
30,000	○	○	○	○	○	○	○	○	○	○	○	○
40,000	○	○	○	○	○	○	○	○	○	○	○	○
50,000	○	○	○	○	○	○	○	○	○	○	○	○
60,000	○	○	○	○	○	○	○	○	○	○	○	○
72,000		○	○	○	○	○	○	○	○	○	○	○
80,000			○	○	○	○	○	○	○	○	○	○
90,000				○	○	○	○	○	○	○	○	○
100,000					○	○	○	○	○	○	○	○
120,000						○	○	○	○	○	○	○
200,000							○		○	○	○	○
259,200										○	○	○
270,000										○	○	○
324,000											○	○

The circle indicates a possible setting.The green items are the maximum resolution setting at that frame rate.
This table is the list of default settings. Even finer settings are possible with the variable setting.

5.1.5. Shutter Speed List (uncertain interval extension: Disable)

Shutter Speed						
1,000	2,105	3,077	5,714	12,308	22,857	160,000
1,020	2,128	3,125	5,882	12,500	23,529	200,000
1,042	2,151	3,175	6,061	12,698	24,242	266,667
1,064	2,174	3,226	6,250	12,903	25,000	400,000
1,087	2,198	3,279	6,452	13,115	25,806	800,000
1,111	2,222	3,333	6,667	13,333	26,667	996,923
1,136	2,247	3,390	6,897	13,559	27,586	
1,163	2,273	3,448	7,143	13,793	28,571	
1,190	2,299	3,509	7,407	14,035	29,630	
1,220	2,326	3,571	7,692	14,286	30,769	
1,250	2,353	3,636	8,000	14,545	32,000	
1,282	2,381	3,704	8,333	14,815	33,333	
1,316	2,410	3,774	8,696	15,094	34,783	
1,351	2,439	3,846	9,091	15,385	36,364	
1,389	2,469	3,922	9,524	15,686	38,095	
1,429	2,500	4,000	10,000	16,000	40,000	
1,471	2,532	4,082	10,127	16,327	42,105	
1,515	2,564	4,167	10,256	16,667	44,444	
1,563	2,597	4,255	10,390	17,021	47,059	
1,613	2,632	4,348	10,526	17,391	50,000	
1,667	2,667	4,444	10,667	17,778	53,333	
1,724	2,703	4,545	10,811	18,182	57,143	
1,786	2,740	4,651	10,959	18,605	61,538	
1,852	2,778	4,762	11,111	19,048	66,667	
1,923	2,817	4,878	11,268	19,512	72,727	
2,000	2,857	5,000	11,429	20,000	80,000	
2,020	2,899	5,128	11,594	20,513	88,889	
2,041	2,941	5,263	11,765	21,053	100,000	
2,062	2,985	5,405	11,940	21,622	114,286	
2,083	3,030	5,556	12,121	22,222	133,333	

The unit in the chart is 1/x s

5.1.6. Shutter Speed List (720,000fps or lower / uncertain interval extension: Enable)

Shutter Speed						
999	2,102	3,070	5,691	12,203	22,500	144,000
1,019	2,124	3,118	5,858	12,392	23,151	175,609
1,040	2,147	3,167	6,035	12,587	23,841	225,000
1,063	2,170	3,218	6,222	12,788	24,573	313,043
1,086	2,194	3,271	6,422	12,996	25,352	514,285
1,109	2,218	3,325	6,635	13,211	26,181	589,090
1,110	2,243	3,381	6,863	13,432	27,067	
1,161	2,269	3,440	7,107	13,662	28,015	
1,189	2,295	3,500	7,369	13,899	29,032	
1,218	2,321	3,562	7,651	14,145	30,125	
1,248	2,349	3,627	7,955	14,400	31,304	
1,280	2,377	3,694	8,285	14,663	32,579	
1,314	2,405	3,763	8,643	14,937	33,962	
1,350	2,434	3,835	9,033	15,221	35,467	
1,387	2,464	3,910	9,461	15,517	37,113	
1,427	2,495	3,988	9,931	15,824	38,918	
1,469	2,527	4,070	10,055	16,143	40,909	
1,513	2,559	4,154	10,183	16,475	43,113	
1,560	2,592	4,242	10,315	16,822	45,569	
1,611	2,626	4,334	10,449	17,183	48,322	
1,664	2,661	4,430	10,588	17,560	51,428	
1,722	2,697	4,531	10,730	17,955	54,961	
1,783	2,734	4,636	10,876	18,367	59,016	
1,849	2,772	4,746	11,026	18,798	63,716	
1,920	2,811	4,861	11,180	19,251	69,230	
1,997	2,851	4,982	11,338	19,726	75,789	
2,017	2,892	5,110	11,501	20,224	83,720	
2,037	2,935	5,243	11,669	20,749	93,506	
2,058	2,978	5,385	11,842	21,301	105,882	
2,080	3,023	5,534	12,020	21,884	122,033	

The unit in the chart is 1/x s

5.1.7. Shutter Speed List (720,001fps or upper / uncertain interval extension: Enable)

Shutter Speed
1378723
1542857

The unit in the chart is 1/x s

5.1.8. Shutter Speed List (13.5K mode OFF / uncertain interval extension: Enable)

Shutter Speed						
998	2,100	3,066	5,678	12,141	22,291	135,849
1,019	2,122	3,114	5,844	12,328	22,929	163,636
1,040	2,145	3,163	6,020	12,521	23,606	205,714
1,062	2,168	3,214	6,206	12,720	24,324	276,923
1,085	2,192	3,266	6,405	12,926	25,087	423,529
1,109	2,216	3,321	6,617	13,138	25,899	472,992
1,134	2,241	3,377	6,844	13,358	26,765	
1,161	2,267	3,435	7,086	13,584	27,692	
1,188	2,292	3,495	7,346	13,819	28,685	
1,217	2,319	3,557	7,627	14,062	29,752	
1,248	2,346	3,621	7,929	14,314	30,901	
1,280	2,374	3,688	8,256	14,574	32,142	
1,313	2,403	3,757	8,612	14,845	33,488	
1,349	2,432	3,829	9,000	15,126	34,951	
1,386	2,462	3,904	9,424	15,417	36,548	
1,426	2,493	3,982	9,890	15,720	38,297	
1,468	2,524	4,063	10,013	16,035	40,223	
1,512	2,556	4,147	10,140	16,363	42,352	
1,559	2,589	4,235	10,271	16,705	44,720	
1,610	2,623	4,326	10,404	17,061	47,368	
1,663	2,658	4,422	10,541	17,433	50,349	
1,720	2,694	4,522	10,682	17,821	53,731	
1,782	2,731	4,627	10,827	18,227	57,600	
1,848	2,769	4,736	10,975	18,652	62,068	
1,918	2,808	4,851	11,128	19,098	67,289	
1,995	2,848	4,972	11,285	19,565	73,469	
2,015	2,889	5,099	11,446	20,055	80,898	
2,036	2,931	5,232	11,612	20,571	90,000	
2,057	2,975	5,373	11,783	21,114	101,408	
2,078	3,020	5,521	11,960	21,686	116,129	

The unit in the chart is 1/x s

5.1.9. Recordable Image Count/Resolution (12bit)

Resolution	8G Model Rec. Frames	16G Model Rec. Frames	32G Model Rec. Frames	64G Model Rec. Frames
1,024×1,024	5,455	10,916	21,839	43,684
1,024×1,000	5,586	11,178	22,363	44,733
1,024×672	8,313	16,635	33,280	66,568
896×496	12,874	25,760	51,531	103,074
896×368	17,352	34,720	69,456	138,927
768×328	22,714	45,448	90,914	181,848
768×272	27,391	54,805	109,632	219,287
640×256	34,924	69,877	139,782	279,592
512×272	41,088	82,209	164,450	328,932
384×264	56,445	112,934	225,912	451,868
256×152	147,058	294,227	588,564	1,177,238
256×80	279,413	559,033	1,118,274	2,236,755
128×48	931,382	1,863,450	3,727,585	7,455,855
128×40	1,117,659	2,236,140	4,473,103	8,947,027
128×16	2,794,152	5,590,355	11,182,760	22,367,571
128×8	5,588,307	11,180,712	22,365,523	44,735,144

* Recording Time = Rec. Frames x 1/frame rate (fps)

5.1.10. Recordable Image Count/Resolution (8bit)

Resolution	8G Model Rec. Frames	16G Model Rec. Frames	32G Model Rec. Frames	64G Model Rec. Frames
1,024×1,024	8,186	16,378	32,762	65,530
1,024×1,000	8,382	16,771	33,548	67,102
1,024×672	12,474	24,958	49,924	99,856
896×496	19,317	38,645	77,302	154,617
896×368	26,036	52,088	104,191	208,397
768×328	34,081	68,181	136,381	272,781
768×272	41,098	82,219	164,460	328,942
640×256	52,401	104,830	209,687	419,402
512×272	61,648	123,329	246,691	493,415
384×264	84,690	169,423	338,890	677,823
256×152	220,643	441,395	882,901	1,765,912
256×80	419,223	838,654	1,677,514	3,355,236
128×48	1,397,416	2,795,518	5,591,720	11,184,126
128×40	1,676,900	3,354,622	6,710,065	13,420,951
128×16	4,192,254	8,386,558	16,775,166	33,552,382
128×8	8,384,510	16,773,118	33,550,334	67,104,766

* Recording Time = Rec. Frames x 1/frame rate (fps)

5.1.11. Recordable Times/Resolution (12bit)

Resolution	Max Framerate	8G Model Rec Times	16G Model Rec Times	32G Model Rec Times	64G Model Rec Times
1,024×1,024	12,500	0.436	0.873	1.747	3.495
1,024×1,000	13,500	0.414	0.828	1.657	3.314
1,024×672	20,000	0.416	0.832	1.664	3.328
896×496	30,000	0.429	0.859	1.718	3.436
896×368	40,000	0.434	0.868	1.736	3.473
768×328	50,000	0.454	0.909	1.818	3.637
768×272	60,000	0.457	0.913	1.827	3.655
640×256	72,000	0.485	0.971	1.941	3.883
512×272	81,000	0.507	1.015	2.030	4.061
384×264	100,000	0.564	1.129	2.259	4.519
256×152	200,000	0.735	1.471	2.943	5.886
256×80	300,000	0.931	1.863	3.728	7.456
128×48	480,000	1.940	3.882	7.766	15.533
128×40	540,000	2.070	4.141	8.284	16.569
128×16	675,000	4.139	8.282	16.567	33.137
128×8	900,000	6.209	12.423	24.851	49.706

The unit in the chart is sec

5.1.12. Recordable Times/Resolution (8bit)

Resolution	Max Framerate	8G Model Rec Times	16G Model Rec Times	32G Model Rec Times	64G Model Rec Times
1,024×1,024	12,500	0.655	1.310	2.621	5.242
1,024×1,000	13,500	0.621	1.242	2.485	4.971
1,024×672	20,000	0.624	1.248	2.496	4.993
896×496	30,000	0.644	1.288	2.577	5.154
896×368	40,000	0.651	1.302	2.605	5.210
768×328	50,000	0.682	1.364	2.728	5.456
768×272	60,000	0.685	1.370	2.741	5.482
640×256	72,000	0.728	1.456	2.912	5.825
512×272	81,000	0.761	1.523	3.046	6.092
384×264	100,000	0.847	1.694	3.389	6.778
256×152	200,000	1.103	2.207	4.415	8.830
256×80	300,000	1.397	2.796	5.592	11.184
128×48	480,000	2.911	5.824	11.649	23.300
128×40	540,000	3.105	6.212	12.426	24.854
128×16	675,000	6.211	12.425	24.852	49.707
128×8	900,000	9.316	18.637	37.278	74.561

The unit in the chart is sec

5.2. Dimensions

5.2.1. Camera Body

FASTCAM SA-X2

（mm）

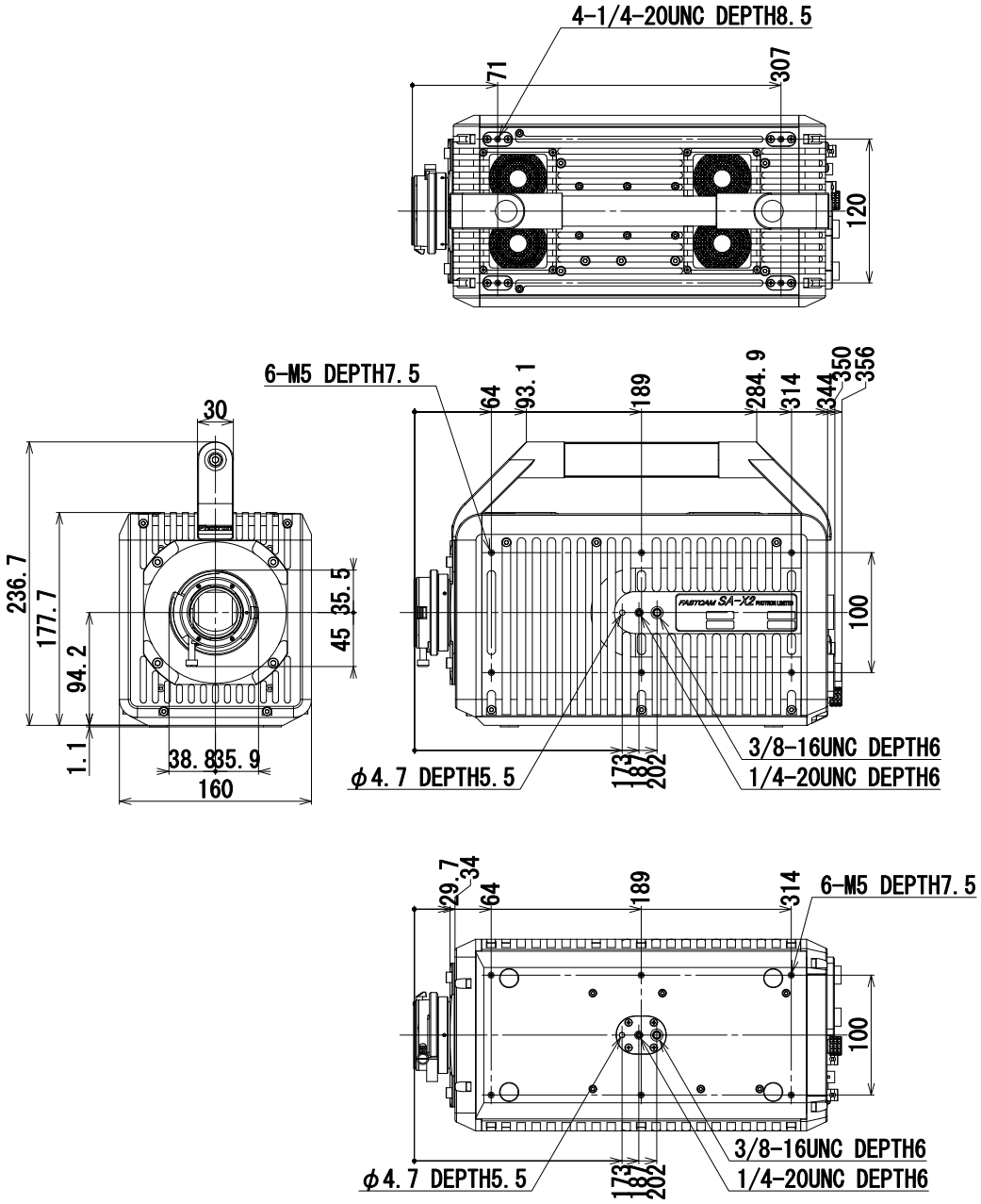

FASTCAM SA-X2 RV

(mm)

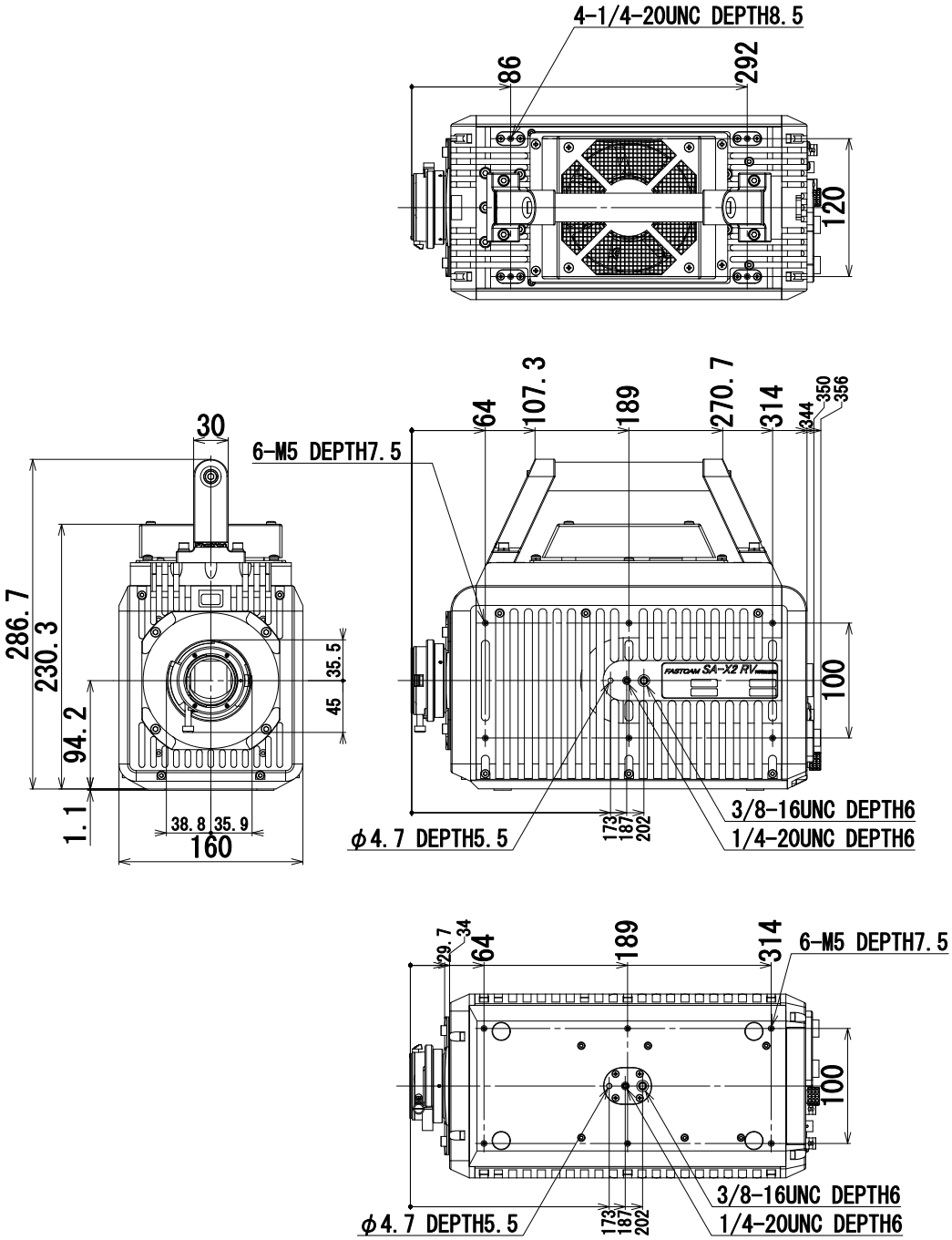

5.2.2. Remote Keypad (Optional)

(mm)

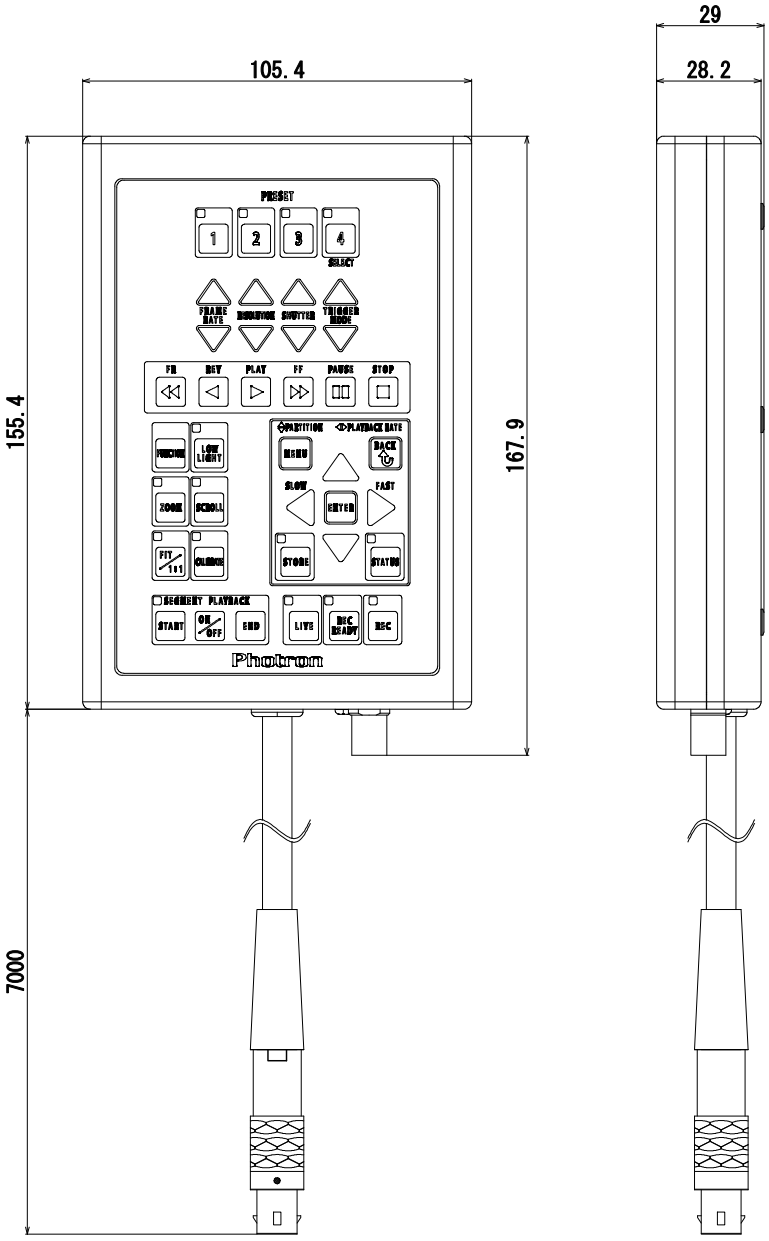

5.2.3. LCD Remote Keypad (Optional)

(mm)

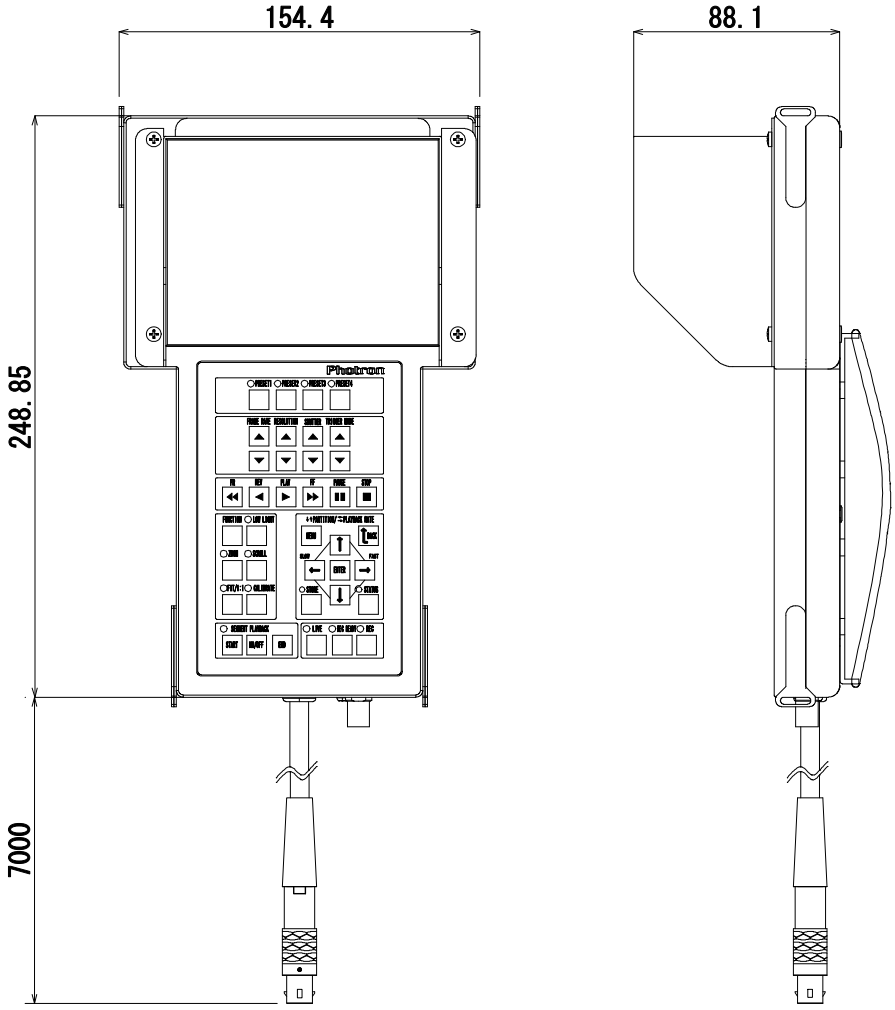

5.2.4. AC Power Supply Unit

(mm)

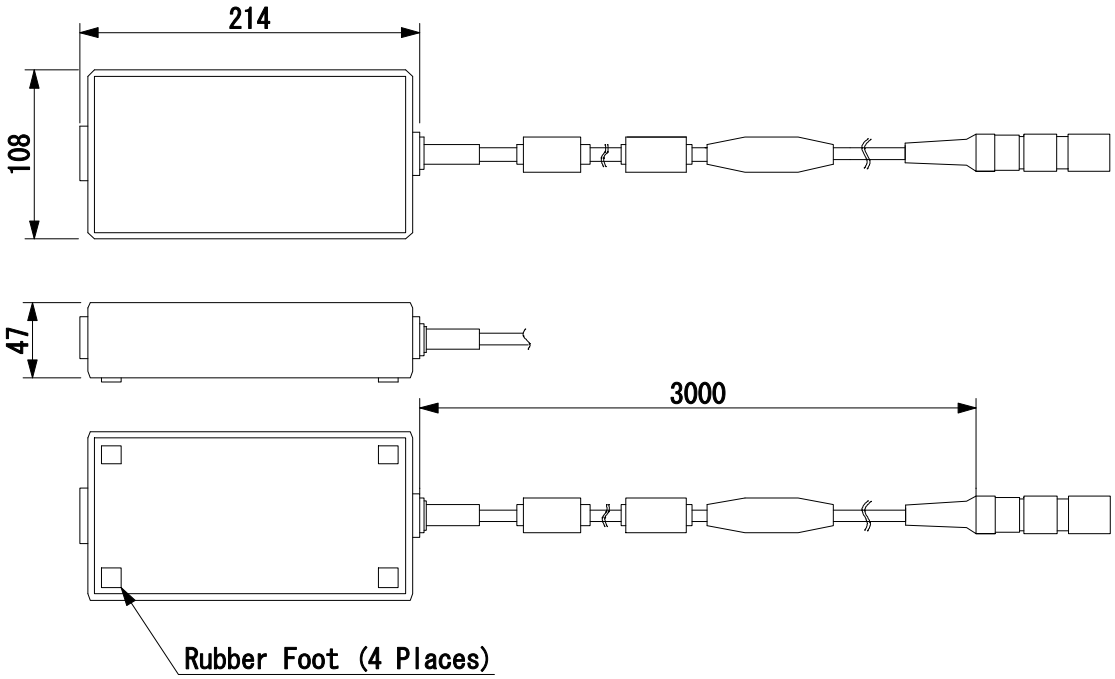

Chapter. 6 **Warranty**

6.1. About the Warranty

6.1. About the Warranty

This system has been shipped having undergone rigorous testing. However, in the unlikely event that it malfunctions due to a manufacturing defect, it will be repaired, at no charge, within the warranty period.

Warranty Exceptions

The following exceptions will result in fee-based repair, even within the warranty period.

1. Damage or malfunction as a result of fire, earthquake, water damage, lightning, other natural disasters, pollution, or the effects of abnormal voltage.
2. Damage or malfunction as a result of dropping or mishandling during shipment or when moving after purchase or misuse.
3. Consumable goods (cables)
4. When repair, adjustment, or alternation done by an entity other than Photron service has been performed on the system, or damage or malfunction that is determined to be attributed to a fault in the use the product.

For inquires related to malfunction, contact the dealer where the product was purchased, or the nearest Photron office.

Reference

- For inquires related to our product, refer to "7.1. Contact Information", page 98.

Chapter. 7 Contacting Photron

7.1. Contact Information

7.1. Contact Information

For inquires related to PFV, contact Photron at the contact information listed below.
Additionally, the following items will be verified when inquiring, so please prepare them in advance.

Items Verified	Concrete Example
Contact Information	Company, school or organization name, customer contact name, contact phone number, contact e-mail address.
Product Name	FASTCAM SA-X2 / SA-X2 RV
Serial Number	Check on the nameplate seal.
Condition of the system and what is known about it.	

Contact Information	
In Americas and Antipodes	**PHOTRON USA, INC.** 9520 Padgett Street, Suite 110 San Diego, CA 92126-4426, USA Phone : 800-585-2129 or 858-684-3555 Fax : 858-684-3558 E-mail : image@photron.com www.photron.com
In Europe, Africa and India	**PHOTRON EUROPE LIMITED** The Barn, Bottom Road, West Wycombe, Buckinghamshire, HP14 4BS, U.K. Phone : +44(0) 1494 48 1011 Fax : +44(0) 1494 48 7011 E-mail : image@photron.com www.photron.com
In other areas	**PHOTRON LIMITED** Fujimi 1-1-8, Chiyoda-Ku Tokyo 102-0071, Japan Phone : +81 3 3238 2107 Fax : +81 3 3238 2109 E-mail : image@photron.co.jp www.photron.co.jp

FASTCAM SA-X2
FASTCAM SA-X2 RV

Hardware Manual　Revision 1.00 USEU

Publication Date　March, 2013
Publisher　PHOTRON LIMITED
Chiyoda Fujimi Bldg., Fujimi 1-1-8, Chiyoda-ku, Tokyo 102-0071

©2013.PHOTRON LIMITED, All rights reserved. Printed in Japan.
(Control No. J130301xxxxU)